ELECTRONIC EXPANSION VALVE *Series*

电子膨胀阀系列

DPF/DPFS/SPF系列电子膨胀阀适用于空调、商用冷柜、小型冷库、大型冷库和热泵等制冷系统中，精确控制系统中制冷剂流量，使系统始终在最佳状态下运行，达到快速制冷、实现精准控制和节能的目的。

DPF/DPFS electronic expansion valve is suitable for refrigeration systems such as air conditioners, commercial refrigerators, small refrigeration storage and heat pumps. It can accurately control the refrigerant flow in the system, so that the system can always run in the best state, achieve rapid cooling, and achieve the goal of precise control and energy saving.

DPF/DPFS 系列电子膨胀阀
DPF/DPFS Series electronic expansion valve

DPF 系列
DPF series

DPFS 系列
DPFS series

产品概述 Product Description

DPF/DPFS型电子膨胀阀适用于空调、商用冷柜、小型冷库和热泵等制冷系统中，精确控制系统中制冷剂流量，使系统始终在最佳状态下运行，达到快速制冷，实现精准控制和节能的目的。

DPF/DPFS electronic expansion valve is suitable for refrigeration systems such as air conditioners, commercial refrigerators, small refrigeration storage and heat pumps. It can accurately control the refrigerant flow in the system, so that the system can always run in the best state, achieve rapid cooling, and achieve the goal of precise control and energy saving.

特点 Features

- 体积小、重量轻，性能稳定可靠；
- 反应和动作速度快；
- 膨胀阀新结构设计，噪音低，故障率低；
- DPFS系列产品采用平衡口设计，逆向开阀压力高；
- 适用于少油或无油系统。

- Small size, light weight, stable and reliable performance;
- Fast response and action;
- New structure design of expansion valve, low noise and low failure rate;
- DPFS series products apply design of balanced port, and the reverse valve opening pressure is high;
- Suitable for systems with little oil or no oil.

技术参数 Technical Parameters

适用制冷剂 Applicable refrigerant	R22、R134a、R404A、R407C、R410A
名义容量 Nominal capacity	2.5~126KW
介质温度 Medium temperature	-30~+70℃
环境温度 Environment temperature	-30~+60℃
环境湿度 Environment humidity	95%RH以下
全开脉冲 Full open pulse	500PS
开阀脉冲 Valve opening pulse	32±20
额定电压 Rated voltage	12V DC （±10%），矩形波 rectangular wave
励磁方式 Excitation mode	1-2相励磁，单极驱动 1-2 phase excitation, single pole drive
励磁速度 Excitation speed	30~90pps
结束励磁模式保持 Finishing excitation mode keeps	0.1~1.0s
全程耗时 Time cost for whole course	6s（83pps）
驱动电流 Drive current	260mA
线圈电阻 Coil resistance	46±3.7Ω/相
线圈绝缘等级 Coil insulation grade	E级
防护等级 Protect grade	IP65

结构 Structure

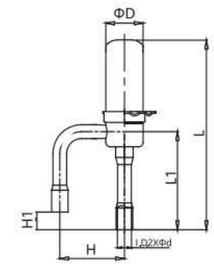

DPF1.3~2.4

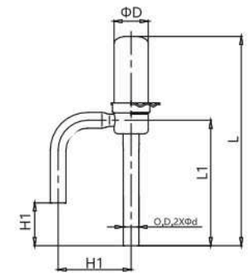

DPF3.0~3.2

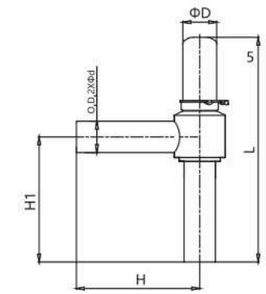

DPFS4.0~6.5

外型尺寸 Overall dimension

型号 Model	外 形 尺 寸 Overall dimension					
	φD	L	L1	H	H1	φd
DPF1.3~2.4	17.3	87	36.8	30	8	6.5
DPF3.0~3.2	17.3	105	41.5	37	21.5	7.94
DPFS4.0~6.5	17.3	114	/	63	64	16

注：接管尺寸可以根据要求定制。

Note: dimension of connecting pipe can be customized according to requirements

线圈 Coil

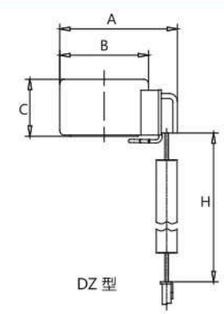

DZ 型

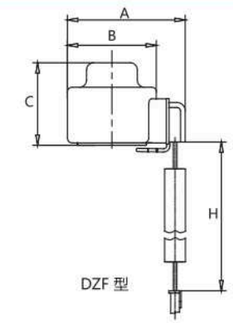

DZF 型

外型尺寸 Overall dimension

系列 Series	线圈型号 Coil model	A	B	C	H	接器型号 Connector model
DZ	DZ090-4612-□□□	51	38.5	25	900	XHP-5 XHP-6 XAP-5 XAP-6
	DZ120-4612-□□□	51	38.5	25	1200	
	DZ200-4612-□□□	51	38.5	25	2000	
	DZ300-4612-□□□	51	38.5	25	3000	
DZF	DZF090-4612-□□□	51	38.5	35.5	900	
	DZF120-4612-□□□	51	38.5	35.5	1200	
	DZF200-4612-□□□	51	38.5	35.5	2000	
	DZF300-4612-□□□	51	38.5	35.5	3000	

注：导线长度和连接器可根据客户要求定制。

Note: the lead wire length and connector can be customized according to customer’s requirements.

驱动时序 Driving schedule

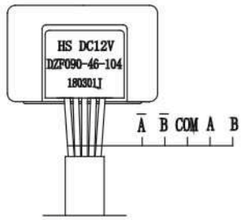

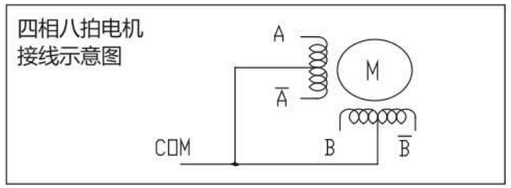

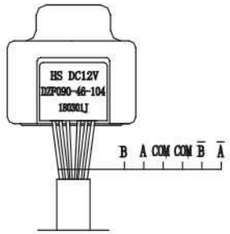

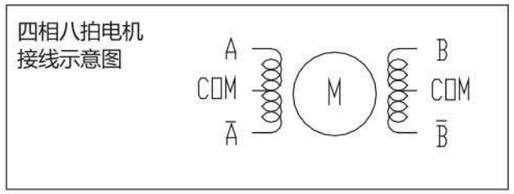

励磁方式								
相号	1	2	3	4	5	6	7	8
A	▨	▨						▨
B		▨	▨	▨				
Ā				▨	▨	▨		
B̄						▨	▨	▨

动作顺序：1→2→3→4→5→6→7→8 关阀

8→7→6→5→4→3→2→1 开阀

选型表 Model selection

产品系列 Product series	全开步数 Full open steps	通经 Diameter	KV[2]	名义容量 [KW] [1] Nominal capacity					最大工作压力 Max. working pressure	最大工作压差 Max. working pressure difference	逆向开阀压差 Reverse valve opening pressure difference
		[mm]	[m3/h]	R22	R134a	R407C[1]	R404A/R507	R410A[1]	[MPa]	[MPa]	[MPa]
DPF1.3	500	1.30	0.06	3.5	2.7	3.50	2.50	4.20	4.2	4.2	≥2.1
DPF1.65	500	1.65	0.08	5.3	4.1	5.30	3.70	6.35	4.2	4.2	≥2.1
DPF1.8	500	1.80	0.10	7.0	5.4	7.00	4.90	8.40	4.2	4.2	≥2.1
DPF2.0	500	2.00	0.16	8.8	6.7	8.75	6.10	10.5	4.2	4.2	≥2.1
DPF2.2	500	2.20	0.20	10.5	8.1	10.5	7.40	12.6	4.2	4.2	≥2.1
DPF2.4	500	2.40	0.23	17.5	13.5	17.5	12.3	21.0	4.2	4.2	≥2.1
DPF3.0	500	3.00	0.39	21.0	16.2	21.0	14.7	25.2	4.2	4.2	≥1.47
DPF3.2	500	3.20	0.43	28.0	21.4	28.0	19.6	33.6	4.2	4.2	≥1.47
DPFS4.0	500	6.50	0.50	42.0	32.3	42.0	29.4	50.4	4.2	4.2	≥3.5
DPFS4.5	500	6.50	0.70	52.5	40.4	52.0	36.8	63.0	4.2	4.2	≥3.5
DPFS5.5	500	6.50	0.80	70.0	53.9	70.0	49.0	84.0	4.2	4.2	≥3.5
DPFS6.5	500	6.50	1.10	105	80.9	100	73.5	126	4.2	4.2	≥3.5

名义工况：

• 额定能力基于：R407C冷凝温度：+38℃； 蒸发温度：+5℃；过冷度：0 K； 过热度：0 K；

• Kv值：基于密度为1T/m3的水、阀门两端压差等于100KPa时的正向流动能力。

Nominal condition:

• Rated capacity is based on: R407C condensing temperature: +38℃; evaporating temperature: +5℃; super cooling degree: 0 K; super heat degree: 0 K;

• Kv value: the pressure difference based on the two sides between water with density 1T/m3 and the valve is equal to the positive flow capacity at 100Kpa.

流量曲线示意图 Schematic pic. of flow curve

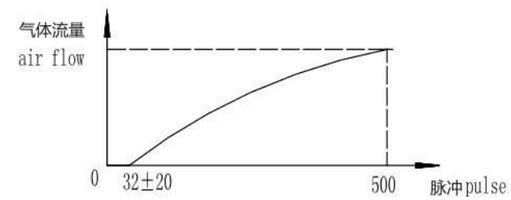

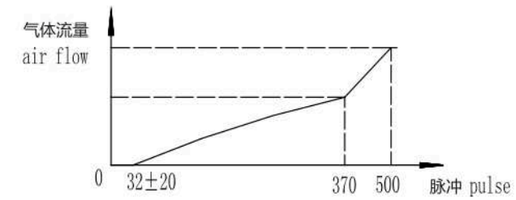

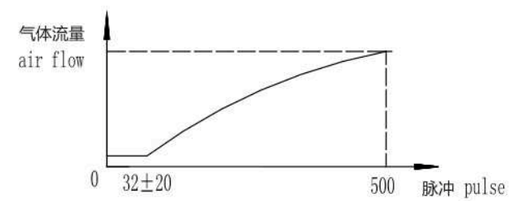

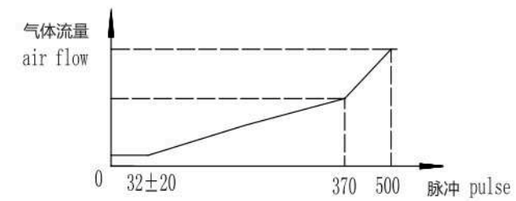

DPF1.0~DPF3.2

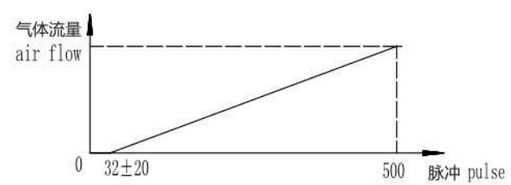

DPFS4.5~DPFS6.5

注：流量曲线要求可以根据要求定制。
Note: the flow curve can be customized according to requirement.

额定能力（kW）Rated capacity

	冷凝温度[℃] Condensing temperature	DPF1.3							DPF1.65						
		蒸发温度[℃] Evaporating temperature							蒸发温度[℃] Evaporating temperature						
		10	5	0	-5	-10	-20	-30	10	5	0	-5	-10	-20	-30
R410A	30	4.38	4.73	5.02	5.24	5.41	5.63	5.71	8.06	8.72	9.25	9.65	9.96	10.36	10.51
	35	4.72	5.00	5.22	5.41	5.54	5.70	5.73	8.68	9.21	9.63	9.95	10.20	10.49	10.56
	38	4.87	5.12	5.31	5.46	5.58	5.70	5.73	8.95	9.42	9.78	10.06	10.26	10.50	10.54
	40	4.93	5.17	5.36	5.49	5.59	5.70	5.70	9.10	9.53	9.86	10.11	10.29	10.49	10.50
	45	5.07	5.26	5.39	5.49	5.58	5.63	5.61	9.33	9.68	9.93	10.13	10.26	10.38	10.32
	50	5.10	5.24	5.36	5.42	5.48	5.49	5.42	9.39	9.65	9.85	9.99	10.07	10.11	10.00
R407C	30	3.79	4.06	4.28	4.43	4.55	4.66	4.66	6.96	7.47	7.86	8.15	8.36	8.57	8.60
	35	4.12	4.65	4.50	4.61	4.70	4.77	4.75	7.58	7.99	8.28	8.50	8.64	8.76	8.74
	38	4.28	4.46	4.60	4.70	4.77	4.80	4.77	7.88	8.22	8.47	8.65	8.76	8.85	8.78
	40	4.38	4.55	4.66	4.75	4.80	4.83	4.77	8.06	8.36	8.58	8.74	8.83	8.89	8.79
	45	4.56	4.68	4.77	4.83	4.85	4.85	4.77	8.39	8.63	8.79	8.89	8.95	8.92	8.76
	50	4.68	4.77	4.82	4.85	4.87	4.82	4.70	8.46	8.78	8.88	8.93	8.95	8.86	8.65
R22	30	3.63	3.92	4.14	4.31	4.44	4.61	4.68	6.68	7.21	7.63	7.95	8.18	8.49	8.61
	35	3.97	4.21	4.39	4.53	4.63	4.75	4.78	7.32	7.75	8.08	8.33	8.53	8.75	8.81
	38	4.14	4.36	4.51	4.63	4.72	4.82	4.83	7.64	8.01	8.31	8.53	8.70	8.88	8.90
	40	4.26	4.44	4.58	4.70	4.77	4.85	4.87	7.82	8.17	8.43	8.64	8.78	8.93	8.95
	45	4.46	4.61	4.73	4.82	4.87	4.92	4.90	8.22	8.50	8.71	8.86	8.97	9.06	9.03
	50	4.63	4.75	4.83	4.90	4.93	4.95	4.90	8.53	8.74	8.90	9.01	9.08	9.11	9.04
R134a	30	2.89	3.08	3.23	3.33	3.40	3.45	3.41	5.31	5.67	5.93	6.11	6.24	6.33	6.29
	35	3.14	3.30	3.40	3.46	3.52	3.53	3.46	5.79	6.07	6.26	6.39	6.46	6.49	6.39
	38	3.28	3.40	3.48	3.53	3.57	3.57	3.50	6.04	6.26	6.42	6.51	6.57	6.56	6.43
	40	3.35	3.46	3.53	3.58	3.60	3.58	3.50	6.18	6.38	6.51	6.58	6.63	6.58	6.45
	45	3.52	3.58	3.63	3.65	3.65	3.60	3.50	6.46	6.60	6.68	6.72	6.72	6.63	6.43
	50	3.62	3.67	3.68	3.68	3.67	3.58	3.46	6.65	6.74	6.78	6.78	6.75	6.60	6.38
R404A	30	2.70	2.89	3.04	3.13	3.19	3.24	3.21	4.97	5.33	5.58	5.76	5.89	5.97	5.90
	35	2.89	3.03	3.13	3.19	3.23	3.23	3.18	5.32	5.57	5.76	5.88	5.95	5.96	5.83
	38	2.96	3.08	3.14	3.19	3.21	3.19	3.11	5.43	5.65	5.79	5.88	5.92	5.89	5.74
	40	2.97	3.08	3.14	3.18	3.19	3.16	3.06	5.47	5.67	5.78	5.85	5.88	5.82	5.64
	45	3.01	3.08	3.11	3.13	3.11	3.04	2.92	5.53	5.65	5.72	5.74	5.72	5.61	5.39
	50	2.96	2.99	3.01	2.99	2.97	2.87	2.72	5.45	5.51	5.53	5.51	5.46	5.29	5.01

额定能力（kW）Rated capacity

	冷凝温度[℃] Condensing temperature	DPF1.8							DPF2.0						
		蒸发温度[℃] Evaporating temperature							蒸发温度[℃] Evaporating temperature						
		10	5	0	-5	-10	-20	-30	10	5	0	-5	-10	-20	-30
R410A	30	9.15	9.88	10.49	10.95	11.31	11.77	11.93	11.30	12.20	12.95	13.52	13.96	14.52	14.73
	35	9.86	10.45	10.91	11.31	11.58	11.91	11.97	12.18	12.90	13.47	13.96	14.29	14.71	14.78
	38	10.18	10.70	11.10	11.41	11.66	11.91	11.97	12.56	13.21	13.70	14.09	14.40	14.71	14.78
	40	10.30	10.80	11.20	11.47	11.68	11.91	11.91	12.72	13.34	13.83	14.16	14.42	14.71	14.71
	45	10.59	10.99	11.26	11.47	11.66	11.77	11.72	13.08	13.57	13.91	14.16	14.40	14.52	14.47
	50	10.66	10.95	11.20	11.33	11.45	11.47	11.33	13.16	13.52	13.83	13.98	14.14	14.16	13.98
R407C	30	7.92	8.48	8.94	9.26	9.51	9.74	9.74	9.78	10.47	11.04	11.43	11.74	12.02	12.02
	35	8.61	9.72	9.40	9.63	9.82	9.97	9.93	10.63	12.00	11.61	11.89	12.13	12.31	12.25
	38	8.94	9.32	9.61	9.82	9.97	10.03	9.97	11.04	11.51	11.87	12.13	12.31	12.38	12.31
	40	9.15	9.51	9.74	9.93	10.03	10.09	9.97	11.30	11.74	12.02	12.25	12.38	12.46	12.31
	45	9.53	9.78	9.97	10.09	10.14	10.14	9.97	11.76	12.07	12.31	12.46	12.51	12.51	12.31
	50	9.78	9.97	10.07	10.14	10.18	10.07	9.82	12.07	12.31	12.44	12.51	12.56	12.44	12.13
R22	30	7.59	8.19	8.65	9.01	9.28	9.63	9.78	9.36	10.11	10.68	11.12	11.45	11.89	12.07
	35	8.30	8.80	9.17	9.47	9.68	9.93	9.99	10.24	10.86	11.33	11.69	11.94	12.25	12.33
	38	8.65	9.11	9.42	9.68	9.86	10.07	10.09	10.68	11.25	11.64	11.94	12.18	12.44	12.46
	40	8.90	9.28	9.57	9.82	9.97	10.14	10.18	10.99	11.45	11.82	12.13	12.31	12.51	12.56
	45	9.32	9.63	9.88	10.07	10.18	10.28	10.24	11.51	11.89	12.20	12.44	12.56	12.69	12.64
	50	9.68	9.93	10.09	10.24	10.30	10.34	10.24	11.94	12.25	12.46	12.64	12.72	12.77	12.64
R134a	30	6.04	6.44	6.75	6.96	7.10	7.21	7.13	7.46	7.95	8.33	8.59	8.77	8.90	8.80
	35	6.56	6.90	7.10	7.23	7.36	7.38	7.23	8.10	8.51	8.77	8.93	9.08	9.11	8.93
	38	6.85	7.10	7.27	7.38	7.46	7.46	7.31	8.46	8.77	8.98	9.11	9.21	9.21	9.03
	40	7.00	7.23	7.38	7.48	7.52	7.48	7.31	8.64	8.93	9.11	9.24	9.29	9.24	9.03
	45	7.36	7.48	7.59	7.63	7.63	7.52	7.31	9.08	9.24	9.36	9.42	9.42	9.29	9.03
	50	7.56	7.67	7.69	7.69	7.67	7.48	7.23	9.34	9.47	9.49	9.49	9.47	9.24	8.93
R404A	30	5.64	6.04	6.35	6.54	6.67	6.77	6.71	6.97	7.46	7.84	8.08	8.23	8.36	8.28
	35	6.04	6.33	6.54	6.67	6.75	6.75	6.65	7.46	7.82	8.08	8.23	8.33	8.33	8.20
	38	6.19	6.44	6.56	6.67	6.71	6.67	6.50	7.64	7.95	8.10	8.23	8.28	8.23	8.02
	40	6.21	6.44	6.56	6.65	6.67	6.60	6.39	7.66	7.95	8.10	8.20	8.23	8.15	7.89
	45	6.29	6.44	6.50	6.54	6.50	6.35	6.10	7.77	7.95	8.02	8.08	8.02	7.84	7.53
	50	6.19	6.25	6.29	6.25	6.21	6.00	5.68	7.64	7.71	7.77	7.71	7.66	7.40	7.02

额定能力（kW）Rated capacity

	冷凝温度[℃] Condensing temperature	DPF2.2							DPF2.4						
		蒸发温度[℃] Evaporating temperature							蒸发温度[℃] Evaporating temperature						
		10	5	0	-5	-10	-20	-30	10	5	0	-5	-10	-20	-30
R410A	30	13.67	14.77	15.67	16.36	16.89	17.57	17.82	16.27	17.57	18.65	19.47	20.10	20.92	21.21
	35	14.73	15.61	16.30	16.89	17.29	17.79	17.89	17.53	18.58	19.39	20.10	20.58	21.18	21.29
	38	15.20	15.98	16.58	17.04	17.42	17.79	17.89	18.09	19.02	19.73	20.28	20.73	21.18	21.29
	40	15.39	16.14	16.73	17.14	17.45	17.79	17.79	18.32	19.21	19.91	20.40	20.77	21.18	21.18
	45	15.83	16.42	16.83	17.14	17.42	17.57	17.51	18.84	19.54	20.02	20.40	20.73	20.92	20.84
	50	15.92	16.36	16.73	16.92	17.11	17.14	16.92	18.95	19.47	19.91	20.14	20.36	20.40	20.14
R407C	30	11.83	12.67	13.36	13.83	14.20	14.55	14.55	14.08	15.08	15.90	16.46	16.90	17.31	17.31
	35	12.86	14.52	14.05	14.39	14.67	14.89	14.83	15.31	17.27	16.72	17.13	17.46	17.72	17.65
	38	13.36	13.92	14.36	14.67	14.89	14.98	14.89	15.90	16.57	17.09	17.46	17.72	17.83	17.72
	40	13.67	14.20	14.55	14.83	14.98	15.08	14.89	16.27	16.90	17.31	17.65	17.83	17.94	17.72
	45	14.23	14.61	14.89	15.08	15.14	15.14	14.89	16.94	17.39	17.72	17.94	18.02	18.02	17.72
	50	14.61	14.89	15.05	15.14	15.20	15.05	14.67	17.39	17.72	17.91	18.02	18.09	17.91	17.46
R22	30	11.33	12.24	12.92	13.45	13.86	14.39	14.61	13.49	14.56	15.38	16.01	16.49	17.13	17.39
	35	12.39	13.14	13.70	14.14	14.45	14.83	14.92	14.75	15.64	16.31	16.83	17.20	17.65	17.76
	38	12.92	13.61	14.08	14.45	14.73	15.05	15.08	15.38	16.20	16.75	17.20	17.53	17.91	17.94
	40	13.30	13.86	14.30	14.67	14.89	15.14	15.20	15.83	16.49	17.01	17.46	17.72	18.02	18.09
	45	13.92	14.39	14.77	15.05	15.20	15.36	15.30	16.57	17.13	17.57	17.91	18.09	18.28	18.20
	50	14.45	14.83	15.08	15.30	15.39	15.45	15.30	17.20	17.65	17.94	18.20	18.32	18.39	18.20
R134a	30	9.02	9.61	10.08	10.40	10.61	10.77	10.64	10.74	11.44	12.00	12.37	12.63	12.82	12.67
	35	9.80	10.30	10.61	10.80	10.99	11.02	10.80	11.67	12.26	12.63	12.85	13.08	13.11	12.85
	38	10.24	10.61	10.86	11.02	11.14	11.14	10.93	12.19	12.63	12.93	13.11	13.26	13.26	13.00
	40	10.46	10.80	11.02	11.18	11.24	11.18	10.93	12.45	12.85	13.11	13.30	13.37	13.30	13.00
	45	10.99	11.18	11.33	11.39	11.39	11.24	10.93	13.08	13.30	13.49	13.56	13.56	13.37	13.00
	50	11.30	11.46	11.49	11.49	11.46	11.18	10.80	13.45	13.63	13.67	13.67	13.63	13.30	12.85
R404A	30	8.43	9.02	9.49	9.77	9.96	10.11	10.02	10.03	10.74	11.29	11.63	11.85	12.04	11.93
	35	9.02	9.46	9.77	9.96	10.08	10.08	9.93	10.74	11.26	11.63	11.85	12.00	12.00	11.81
	38	9.24	9.61	9.80	9.96	10.02	9.96	9.71	11.00	11.44	11.67	11.85	11.93	11.85	11.55
	40	9.27	9.61	9.80	9.93	9.96	9.86	9.55	11.03	11.44	11.67	11.81	11.85	11.74	11.37
	45	9.40	9.61	9.71	9.77	9.71	9.49	9.12	11.18	11.44	11.55	11.63	11.55	11.29	10.85
	50	9.24	9.33	9.40	9.33	9.27	8.96	8.49	11.00	11.11	11.18	11.11	11.03	10.66	10.10

SPF 系列电子膨胀阀
SPF Series electronic expansion valve

SPF12.5/25

SPF50/100

SPF250/400

产品概述 Product Description

SPF型系列电子膨胀阀适用于商用冷柜、大型冷库和热泵等制冷系统中，精确控制系统中制冷剂流量，使系统始终在最佳状态下运行，达到快速制冷，实现精准控制和节能的目的。

SPF series electronic expansion valve is suitable for refrigeration systems such as commercial refrigerators, large refrigeration storages and heat pumps. It can accurately control the refrigerant flow in the system, so that the system can always run in the best state, achieve rapid cooling, and achieve the goal of precise control and energy saving.

特点 Features

- 集电磁阀、膨胀阀、视液镜功能于一体，性能稳定可靠；
- 反应和动作速度快，调节精准；
- 膨胀阀新结构设计，易拆卸清理，噪音低；
- SPF系列产品采用平衡口设计，逆向开阀压力高,具有双向截止功能；
- 适用于少油或无油系统。

- Integrated with the function of solenoid valve, expansion valve and sight glass, stable and reliable performance;
- Fast response and action, precise adjustment;
- New structure design of expansion valve, easy to dismantle and clean, low noise;
- SPF series products apply a balanced port design with high reverse valve opening pressure, and have bidirectional cut-off function;
- Suitable for systems with little oil or no oil.

技术参数 Technical Parameters

适用制冷剂 Applicable refrigerant	HCFC或HFC
名义容量 Nominal capacity	43~1936KW
介质温度 Medium temperature	-40~+65℃
环境温度 Environment temperature	-40℃~+60℃
环境湿度 Environment humidity	95%RH以下
全开脉冲 Full open pulse	2620~3800（详见选型表）see model select table for detail
额定电压 Rated voltage	12V DC （±10%），矩形波 rectangular wave
励磁方式 Excitation mode	2-2相励磁，双极驱动 2-2 phase excitation, double pole drive
励磁速度 Excitation speed	250pps/300pps, 电压/电流 voltage/ current
结束励磁模式保持 Finishing excitation mode keeps	0.1~1.0s
驱动电流 Drive current	230mA
线圈电阻 Coil resistance	52Ω/相
线圈绝缘等级 Coil insulation grade	E级
防护等级 Protect grade	IP65

外型尺寸 Overall dimension

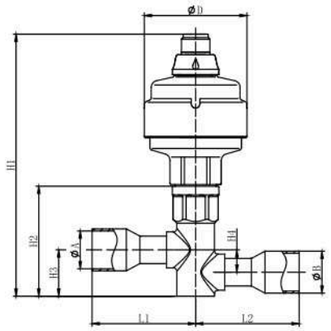

SPF12.5/25

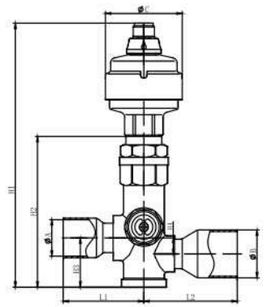

SPF50/100

Model	H1	H2	H3	H4	L1	L2	A	B	C
SPF12.5-5-5	152.5	64	27	13	60.5	60.5	16.1	16.1	60
SPF12.5-7-7	152.5	64	27	13	60.5	60.5	22.3	22.3	60
SPF25-5-5	152.5	64	27	13	60.5	60.5	16.1	16.1	60
SPF25-7-7	152.5	64	27	13	60.5	60.5	22.3	22.3	60
SPF50-7-7	206.3	118	38.5	12.5	56	56	22.3	22.3	60
SPF50-9-9	206.3	118	38.5	12.5	63	63	28.7	28.7	60
SPF50-7-9	206.3	118	38.5	12.5	56	63	22.3	28.7	60
SPF50-9-11	206.3	118	38.5	12.5	63	73	28.7	35.2	60
SPF100-9-9	206.3	118	38.5	12.5	63	63	28.7	28.7	60
SPF100-9-11	206.3	118	38.5	12.5	63	73	28.7	35.2	60

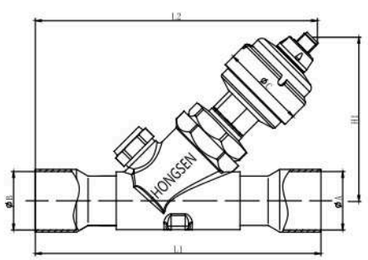

SPF250/400

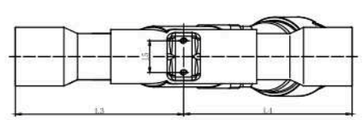

型号 Model	H1	L1	L2	L3	L4	L5	A	B	C
SPF250-9-9	206.3	168.5	184.3	84.3	84.3	24	28.7	28.7	60
SPF250-11-11	206.3	203	189.3	89.3	89.3	24	35.2	35.2	60
SPF400-13-13	206.3	203	201.5	101.5	101.5	24	41.5	41.5	60
SPF400-17-17	206.3	242	221	121	121	24	54.2	54.2	60

注：接管尺寸可以根据要求定制。 Note: dimension of connecting pipe can be customized according to requirements

驱动时序 Driving Schedule

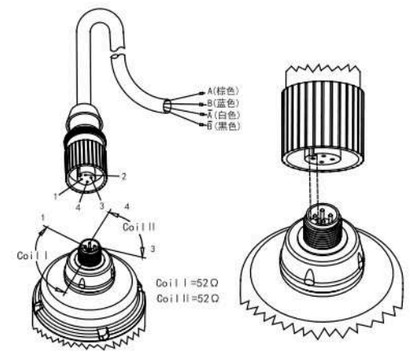

相序	1	2	3	4
A（棕）	no	no	off	off
B（蓝）	no	off	off	no
Ā（白）	off	off	no	no
B̄（黑）	off	no	no	off

关阀：1 → 2 → 3 → 4

开阀：1 ← 2 ← 3 ← 4

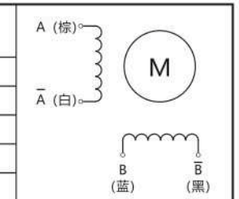

步进电机原理图

连接线缆总成 Connecting cable assembly

型号 Model	温度范围 Temperature range	长度 Length	接头规格 Connector specification	与控制连接方式 Connecting mode with control	示图 Schematic pic.
M124×Z1MD	-40℃~+80℃	1米	M12×1（防水）	引出线4×0.18mm2	

选型表 Model selection

产品系列 Product series	全开步数 Full open steps	通经 Diameter	KV[2]	名义容量 [KW] [1] Nominal capacity					最大工作压力 Max. working pressure	最大工作压差 Max. working pressure difference	逆向开阀压差 Reverse valve opening pressure difference
		[mm]	[m3/h]	R22	R134a	R407C[*1]	R404A/R507	R410A[*1]	[MPa]	[MPa]	[MPa]
SPF12.5	2620	4.50	0.70	57	45	63	43	70	4.5	3.5	≥3.5
SPF25	2620	8.00	1.30	112	89	124	84	139	4.5	3.5	≥3.5
SPF50	2620	11.5	2.30	226	182	265	173.5	274	4.5	3.5	≥3.5
SPF100	3500	16.0	3.90	408	325	455	308	496	4.5	3.5	≥3.5
SPF250	3800	24.0	12.2	1092	862	1203	817	/	3.5	3.0	≥3.0
SPF400	3800	30.0	17.0	1768	1397	1936	1324	/	3.5	3.0	≥3.0

名义工况：

- 额定能力基于：R407C 冷凝温度Tc：+32℃； 蒸发温度Te：+5℃； 阀前液体温度Ti: +28℃；
- Kv值：基于密度为1T/m3的水、阀门两端压差等于100KPa时的正向流动能力。

Nominal condition:

- Rated capacity is based on: R407C condensing temperature Tc：+32℃; evaporating temperature Te：+5℃; liquid temperature before valve Ti: +28℃ ;
- Kv value: the pressure difference based on the two sides between water with density 1T/m3 and the valve is equal to the positive flow capacity at 100Kpa.

流量曲线示意图 Schematic pic. of flow curve

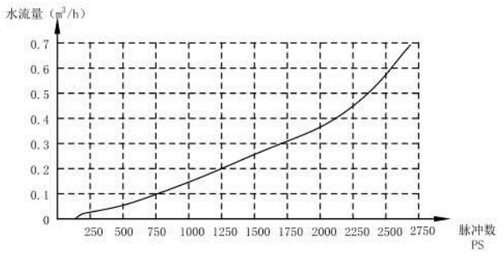

SPF12.5

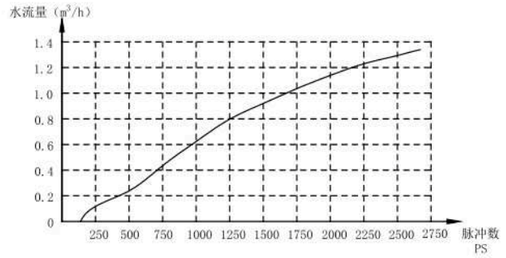

SPF25

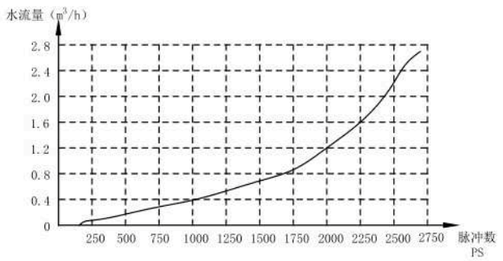

SPF50

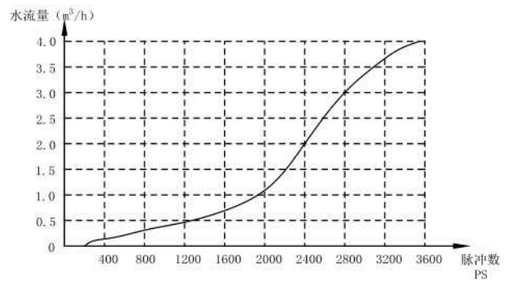

SPF100

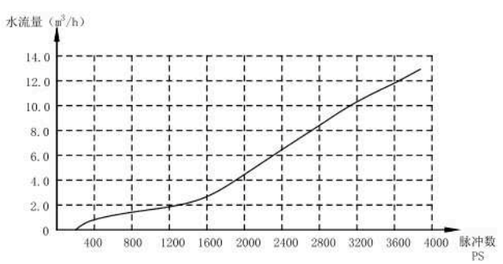

SPF250

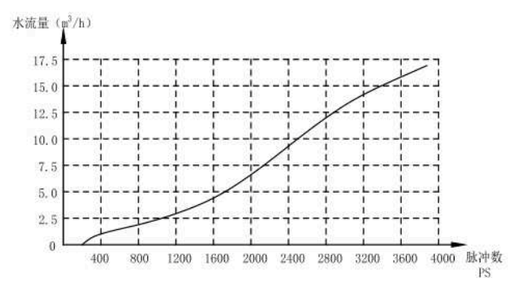

SPF400

额定能力（kW）Rated capacity

	te[℃]	正向流额定能力[KW] Positive flow rated capacity															
		SPF12.5								SPF25							
		压降⊿P[bar] Pressure drop															
		2	4	6	8	10	12	14	16	2	4	6	8	10	12	14	16
R22	-40	39.6	50.6	57.1	61.2	64.1	65.9	67.0	67.6	82.0	105.4	118.5	126.6	133.6	137.0	139.3	140.9
	-30	39.2	50.6	57.3	61.7	64.7	66.7	68.1	68.8	81.8	104.5	119.3	128.7	134.0	139.2	141.5	143.4
	-20	38.5	50.1	57.1	61.7	64.9	67.1	68.6	69.4	80.3	104.3	118.9	128.7	134.8	140.0	143.0	144.7
	-10	37.5	49.2	56.3	61.2	64.5	66.9	68.5	69.5	78.1	102.5	117.0	127.5	134.6	138.5	142.8	144.6
	-5	36.9	48.6	55.8	60.7	64.1	66.5	68.2	69.2	76.9	101.1	116.3	126.2	133.3	138.8	142.2	144.4
	10	34.7	40.3	53.3	58.3	62.0	64.4	66.2	67.4	72.3	96.2	111.3	121.7	129.2	134.4	138.2	140.6
R134a	-40	35.1	42.6	46.1	47.8	48.3	47.9	47.0	45.6	73.1	88.8	95.8	99.7	100.6	99.9	98.0	94.9
	-30	35.3	43.4	47.3	49.3	50.0	49.9	49.2	47.9	73.5	90.4	98.5	102.6	104.2	104.0	102.4	99.9
	-20	35.1	43.7	48.1	50.4	51.3	51.4	50.9	49.9	73.3	91.1	100.2	104.8	107.0	107.2	106.2	104.0
	-10	34.7	43.7	48.4	50.9	52.2	52.5	52.2	51.3	72.3	91.0	100.8	106.2	108.7	109.5	108.9	107.0
	-5	34.3	43.5	48.3	51.0	52.4	52.9	52.6	51.8	71.6	90.6	100.7	106.4	109.3	110.3	109.8	108.2
	10	32.8	42.2	47.4	50.5	52.2	52.9	53.0	52.4	68.3	87.6	98.9	105.1	108.9	110.4	110.5	109.3
R404A	-40	31.4	39.0	42.8	44.5	45.2	45.1	44.4	43.2	65.7	81.4	89.2	93.0	94.3	94.0	92.5	90.0
	-30	31.1	38.9	43.0	45.1	46.0	46.0	45.5	44.4	64.7	81.2	89.7	94.0	95.9	96.1	94.9	92.8
	-20	30.3	38.4	42.7	45.0	46.2	46.4	46.1	45.2	63.0	80.1	89.1	94.0	96.3	96.9	96.1	94.3
	-10	29.1	37.4	41.9	44.4	45.7	46.2	46.0	45.2	60.7	78.0	87.4	92.7	95.4	96.3	95.9	94.4
	-5	28.5	36.8	41.3	44.0	45.3	45.8	45.6	44.9	59.4	76.6	86.1	91.6	94.5	95.5	95.2	93.8
	10	26.1	34.1	38.6	41.3	42.9	43.5	43.5	43.9	54.3	71.0	80.3	86.0	89.2	90.5	90.4	89.3
R407C	-40	41.5	52.0	57.7	61.1	63.0	64.0	64.1	63.7	86.0	108.0	120.2	127.0	131.4	132.8	133.2	132.5
	-30	41.3	52.2	58.3	62.1	64.2	65.3	65.7	65.4	85.5	108.5	121.0	128.9	133.3	135.8	137.1	136.1
	-20	40.6	52.0	58.4	62.5	64.8	66.2	66.8	66.8	84.2	108.0	121.4	129.7	134.8	137.7	138.9	138.8
	-10	39.6	51.2	57.9	62.2	64.9	66.5	67.3	67.4	82.0	106.4	119.9	129.2	134.9	138.7	139.8	140.6
	-5	39.0	50.7	57.5	61.9	64.6	66.3	67.2	67.4	81.3	105.2	120.0	128.4	134.9	138.4	139.7	140.6
	10	36.6	48.2	55.2	59.7	62.8	64.5	65.7	66.1	76.3	100.5	114.5	124.6	130.9	134.2	137.1	137.9
R410A	-40	45.7	59.1	67.1	72.4	76.2	78.7	80.4	81.4	94.9	122.7	139.0	150.6	157.8	163.1	166.6	168.3
	-30	44.5	58.1	66.3	71.9	75.8	78.5	80.4	81.5	91.9	120.7	137.9	149.0	157.1	162.8	165.2	169.3
	-20	43.0	56.6	64.9	70.6	74.7	77.5	79.5	80.8	89.6	117.1	135.4	146.4	154.8	161.0	165.4	167.6
	-10	41.0	54.4	62.8	68.6	72.7	75.7	77.7	79.1	85.5	113.5	131.0	143.1	151.7	157.9	162.2	165.0
	-5	39.9	53.1	61.5	67.3	71.4	74.4	76.5	77.8	83.3	109.7	127.2	139.1	147.9	154.6	158.5	162.5
	10	36.2	48.5	56.5	62.1	66.1	69.1	71.1	72.4	74.9	101.2	116.8	128.5	136.9	143.0	147.3	151.2

额定能力（kW）Rated capacity

	te[℃]	正向流额定能力[KW] Positive flow rated capacity															
		SPF50								SPF100							
		压降⊿P[bar] Pressure drop															
		2	4	6	8	10	12	14	16	2	4	6	8	10	12	14	16
R22	-40	151.8	194.3	218.1	234.1	245.6	252.1	256.8	258.9	282.1	360.6	406.6	436.7	456.6	469.7	478.0	482.4
	-30	150.0	193.1	218.0	236.0	247.8	255.7	260.2	263.6	279.1	359.8	407.6	439.4	461.2	475.5	485.2	490.4
	-20	147.1	191.7	218.0	236.0	248.6	256.8	262.6	266.3	274.0	356.5	406.4	439.5	462.5	478.4	488.7	494.7
	-10	143.1	187.9	215.1	233.9	246.9	255.9	262.4	265.8	266.8	349.7	401.0	435.3	459.4	477.2	487.9	495.1
	-5	140.9	185.8	213.6	232.0	245.1	254.2	260.9	264.8	262.9	345.9	397.2	432.2	456.4	473.7	485.8	493.4
	10	132.7	176.6	204.0	223.0	236.9	246.8	253.6	257.8	246.6	328.3	379.7	415.5	441.3	458.9	472.0	480.3
R134a	-40	133.1	162.4	175.7	181.8	183.2	182.1	178.8	173.7	247.9	301.7	326.8	338.6	342.0	339.5	332.7	322.9
	-30	135.0	164.9	179.9	187.6	190.0	189.8	187.9	183.6	249.5	306.7	334.7	348.7	353.7	352.9	347.9	339.4
	-20	134.2	167.1	183.8	191.6	195.0	196.2	194.2	190.3	248.5	309.4	340.4	356.5	363.4	364.2	360.7	353.3
	-10	131.9	166.0	184.9	194.8	198.7	199.8	198.7	195.6	245.5	309.2	342.7	360.9	369.2	371.6	369.3	363.3
	-5	130.7	166.1	184.8	194.5	199.6	201.5	201.0	197.6	242.6	307.4	341.9	361.1	370.8	374.1	372.4	367.0
	10	124.8	160.7	181.1	192.5	198.7	201.6	202.2	199.7	231.8	298.5	335.5	357.2	369.3	374.6	374.8	371.1
R404A	-40	119.9	149.3	163.4	169.9	173.2	172.5	169.6	164.9	223.4	276.7	303.3	316.2	320.9	320.4	315.4	306.8
	-30	118.0	148.1	163.9	172.4	175.1	176.3	173.8	169.9	219.7	276.0	304.7	319.7	326.2	326.9	323.2	316.1
	-20	115.5	146.1	162.8	171.9	176.0	177.1	175.9	173.3	214.3	272.4	302.8	319.7	327.6	329.7	328.0	322.0
	-10	110.9	142.2	159.8	169.2	174.7	176.1	175.2	173.4	206.4	265.4	297.5	315.4	324.6	328.2	326.6	322.6
	-5	108.7	139.9	157.1	167.7	173.3	174.8	174.1	172.4	201.8	260.3	292.7	311.4	321.4	325.1	324.2	319.7
	10	99.7	129.9	147.1	157.8	163.2	165.9	165.9	164.9	185.4	241.6	273.9	294.4	304.4	309.1	308.6	305.3
R407C	-40	158.8	199.7	222.5	236.4	243.9	248.6	249.9	249.6	295.6	371.7	413.3	438.7	454.2	462.1	464.9	464.0
	-30	157.8	200.7	224.2	239.2	249.3	253.9	257.1	256.6	293.5	373.4	417.8	445.9	462.7	472.5	477.1	477.5
	-20	155.2	199.8	225.0	241.5	251.1	257.7	260.8	261.2	289.4	371.7	419.0	448.8	468.1	479.5	485.5	486.9
	-10	151.9	196.9	223.2	240.2	251.8	258.8	263.3	264.0	282.6	366.6	416.4	447.8	468.4	481.8	488.8	491.8
	-5	149.2	194.9	222.4	239.1	250.9	258.1	262.7	264.6	278.5	363.0	413.1	445.4	466.9	480.9	488.6	492.4
	10	140.4	186.4	214.1	231.8	244.5	253.2	257.7	255.5	261.9	345.8	397.3	431.3	454.6	469.8	479.2	484.5
R410A	-40	174.4	224.8	254.6	275.8	288.8	299.6	306.4	310.3	324.1	418.7	475.4	513.3	539.1	557.2	569.5	576.8
	-30	169.2	221.9	252.7	273.8	288.2	298.8	305.9	310.6	315.4	411.8	469.8	509.2	536.9	556.1	569.5	577.6
	-20	163.2	215.0	247.9	268.8	284.1	295.5	302.8	308.2	304.4	400.8	459.4	500.8	529.3	549.2	565.8	572.8
	-10	156.0	206.9	239.4	265.8	276.8	289.0	295.9	301.5	290.8	385.4	444.6	485.7	515.7	536.1	555.7	561.0
	-5	151.9	202.0	234.4	259.0	271.8	283.5	291.5	296.7	282.9	373.4	435.6	461.8	505.8	527.0	542.2	552.2
	10	137.3	184.8	214.0	236.1	252.3	262.9	271.8	276.0	256.1	343.5	399.9	439.9	464.3	489.7	503.8	513.9

额定能力（kW）Rated capacity

	te[℃]	正向流额定能力[KW] Positive flow rated capacity															
		SPF250								SPF400							
		压降⊿P[bar] Pressure drop															
		2	4	6	8	10	12	14	16	2	4	6	8	10	12	14	16
R22	-40	778.5	995.0	1121.0	1205.0	1259.5	1297.0	1318.5	1328.5	1249.2	1595.0	1799.0	1931.6	2021.1	2079.4	2115.6	2133.6
	-30	771.0	992.5	1126.0	1213.5	1273.0	1262.5	1339.0	1351.5	1236.2	1593.0	1805.0	1945.7	2041.2	2105.5	2146.7	2169.8
	-20	755.5	984.0	1120.5	1213.0	1276.0	1320.0	1348.5	1364.5	1213.1	1576.9	1798.0	1944.7	2046.2	2116.5	2161.8	2148.9
	-10	737.0	966.0	1107.0	1201.5	1269.0	1315.0	1347.0	1366.0	1180.9	1548.7	1774.8	1927.6	2034.2	2108.5	2158.8	2189.9
	-5	723.0	954.0	1095.0	1193.0	1260.5	1308.0	1341.0	1360.0	1161.8	1529.6	1756.8	1912.5	2021.1	2097.5	2149.7	2181.9
	10	680.5	905.0	1049.0	1146.0	1218.0	1267.0	1303.0	1323.0	1091.4	1453.2	1681.4	1839.2	1951.7	2032.1	2088.4	2124.6
R134a	-40	683.5	832.0	901.5	934.0	942.5	936.0	918.5	890.5	1097.5	1334.7	1446.2	1497.5	1512.6	1501.5	1472.4	1429.1
	-30	687.0	846.0	924.0	963.0	976.0	974.5	960.0	935.0	1103.5	1357.8	1481.4	1542.7	1565.8	1562.8	1539.7	1501.5
	-20	683.5	853.5	938.0	983.0	1002.0	1004.0	994.5	973.5	1099.5	1368.8	1505.5	1576.9	1608.0	1611.0	1595.0	1562.8
	-10	676.0	853.0	944.0	995.0	1020.0	1025.5	1020.0	1002.0	1135.4	1366.8	1514.6	1595.0	1635.2	1645.2	1635.2	1608.0
	-5	669.5	849.0	942.5	997.0	1023.0	1033.0	1029.0	1012.5	1074.4	1360.8	1513.5	1599.0	1642.2	1656.3	1649.2	1625.1
	10	640.0	823.5	927.0	987.0	1020.0	1033.5	1033.0	1022.5	1026.1	1321.6	1485.4	1581.9	1635.2	1658.3	1659.3	1643.2
R404A	-40	615.0	763.0	836.0	871.0	884.0	881.0	867.0	844.0	985.9	1223.1	1339.7	1397.0	1417.1	1413.0	1389.9	1352.7
	-30	606.0	761.0	840.0	881.0	899.0	900.0	890.0	870.0	971.9	1220.1	1346.7	1413.0	1441.2	1443.2	1426.1	1394.0
	-20	591.0	750.0	835.0	881.0	903.0	908.0	901.0	884.0	946.7	1203.0	1338.7	1412.1	1447.2	1455.3	1444.2	1417.1
	-10	569.0	731.0	819.0	869.0	894.0	903.0	899.0	884.0	912.6	1171.8	1312.5	1392.9	1433.1	1447.2	1440.2	1418.1
	-5	556.0	718.0	807.0	858.0	885.0	895.0	892.0	879.0	891.5	1150.8	1293.5	1375.9	1419.1	1435.2	1430.1	1409.0
	10	510.0	665.0	754.0	806.0	836.5	849.0	849.0	836.5	818.1	1067.3	1210.1	1294.5	1341.7	1361.8	1360.8	1342.7
R407C	-40	810.5	1016.0	1128.0	1194.0	1232.0	1248.5	1251.0	1242.5	1300.5	1630.1	1810.0	1914.6	1973.4	2002.0	2007.0	1994.0
	-30	805.5	1021.0	1140.0	1211.5	1255.0	1276.0	1284.0	1278.0	1292.4	1637.2	1829.1	1943.7	2012.0	2047.2	2059.3	2051.2
	-20	792.5	1016.0	1142.5	1220.0	1268.0	1294.0	1306.0	1303.0	1272.3	1629.1	1832.1	1956.8	2033.1	2075.4	2093.4	2092.4
	-10	772.5	1002.0	1133.0	1216.0	1268.0	1298.0	1315.0	1315.5	1241.2	1606.0	1817.1	1949.7	2034.2	2083.4	2107.5	2111.5
	-5	761.5	990.0	1123.0	1207.5	1264.0	1296.0	1314.0	1317.0	1221.1	1587.9	1802.0	1938.7	2026.1	2078.4	2105.5	2112.5
	10	715.0	940.5	1076.5	1167.0	1226.0	1262.5	1284.5	1291.5	1146.7	1509.5	1727.6	1871.3	1965.8	2026.1	2059.3	2072.3
R410A	-40	/	/	/	/	/	/	/	/	/	/	/	/	/	/	/	/
	-30	/	/	/	/	/	/	/	/	/	/	/	/	/	/	/	/
	-20	/	/	/	/	/	/	/	/	/	/	/	/	/	/	/	/
	-10	/	/	/	/	/	/	/	/	/	/	/	/	/	/	/	/
	-5	/	/	/	/	/	/	/	/	/	/	/	/	/	/	/	/
	10	/	/	/	/	/	/	/	/	/	/	/	/	/	/	/	/

DPF/DPFS系列电子膨胀阀控制器
DPF/DPFS series electronic expansion valve controller

T0055（一拖二）

T0056（一拖三）

产品概述 Product Description

用于DPF/DPFS系列电子膨胀阀的过热度控制和机组控制，适用4相步进电机驱动的电子膨胀阀，以4相8拍1-2相励磁驱动方式控制。保障系统处于安全范围内运转，提高压缩机和系统的可靠性，降低系统功耗（提高系统COP），提高系统的制冷能力。	Used for super heat degree control and unit control of DPF/DPFS series electronic expansion vlave, and suitable for the electronic expansion valve driven by 4 phase stepper motors and controlled by 4 phase 8 beat 1-2 phase excitation driving mode. Ensure the system is operating within a safe range, improve the reliability of compressor and system, reduce system power consumption (improve system COP), enhance the refrigerating capacity of system.

特点 Features

• 通过采集系统各部位温度信息，分析系统当前运行状态，运用模糊算法，使用自适应控制； • 反应和动作速度快，调节精准； • 电子膨胀阀控制器可根据系统参数设定，以适应不同的设备和工况需求； • 导轨式安装方便。	• Analyze the system current running state by collecting temperature information of each part of the system, use fuzzy algorithms, and adopt self-adaptive control; • Fast response and action, precise adjustment; • The electronic expansion valve controller can be set according to the system parameters to adapt demands of different equipments and conditions; • Easy installation of guide rail type

技术参数 Technical Parameters

使用环境 Working environment	温度-20~55℃，相对湿度≤90%RH(无凝露) temperature -20~55℃, relative humidity ≤90%RH (no condensation)
保存环境 Storing environment	温度-40~80℃，相对湿度≤95%RH(无凝露) temperature -40~80℃, relative humidity ≤95%RH(no condensation)
输入电源 Input power	单相交流110~220V/50Hz(60Hz) single phase alternative current 110~220V/50Hz(60Hz)
电子膨胀阀输出 Electronic expansion valve outpu	2路，单相最大负荷输出0.5A/12V 2 way, single phase maximum load output 0.5A/12V
温度传感器输入 Temperature sensor input	5路(含压力传感器),温度传感器B3470/5K；温度分辨率：0.1℃ 5 way (including pressure sensor), temperature sensor B3470/5K；temperature resolution: 0.1℃
压力传感器输入 Pressure sensor input	1路；压力分辨率0.01Bar 1 way; pressure resolution: 0.01Bar
交流输入开关 AC input switch	2路 2 way
继电器输出 Relay output	2路无源开关，负载能力：5A/220V 2 way passive switch, load capacity: 5A/220V
通信接口 Communication interface	1路,RS485 1 way, RS485

选型表 Model selection

序号 No	控制方式 Control method	代号 code	控制器型号 Controller model	适配器件型号 Adapter model		数量 Quantity	功能描述 Function description	设置参数 Set parameter
1	回气过热度控制 Air return super heat degree control	T0055	PCH-FP2N	电子膨胀阀 Electronic expansion valve	DPF、DPFS系列 DPF、DPFS series	1	一路主 (一拖一) 图1 One main way (1 carrying 1) PIC 1	
				压力传感器 Pressure sensor	NS-P321-30-20barG	1		201
				温度传感器 Temperature sensor	NTC5K3470	1		
	回气过热度控制 Air return super heat degree control	T0055	PCH-FP2N	电子膨胀阀 Electronic expansion valve	DPF、DPFS系列 DPF、DPFS series	2	二路主 (一拖二) 图2 Two main ways (1 carrying 2) Pic 2	
				压力传感器 Pressure sensor	NS-P321-30-20barG	1		201
				温度传感器 Temperature sensor	NTC5K3470	2		
	回气过热度控制 Air return super heat degree control	T0056	PCH-FP3N	电子膨胀阀 Electronic expansion valve	DPF、DPFS系列 DPF、DPFS series	3	三路主 (一拖三) 图3 Three main ways (1 carrying 3) Pic 3	
				压力传感器 Pressure sensor	NS-P321-30-20barG	1		201
				温度传感器 Temperature sensor	NTC5K3470	3		
2	回气过热度+喷液冷却 Air return super heat degree+liquid injecting cooling	T0055	PCH-SP1L	电子膨胀阀 Electronic expansion valve	DPF、DPFS系列 DPF、DPFS series	2	一路主、一路辅 图4 One main way, one auxiliary Pic 4	
				压力传感器 Pressure sensor	NS-P321-30-20barG	1		201
				温度传感器 Temperature sensor	NTC5K3470	2		

选型表 Model selection

序号 No	控制方式 Control method	代号 code	控制器型号 Controller model	适配器件型号 Adapter model		数量 Quantity	功能描述 Function description	设置参数 Set parameter
3	回（排）气过热度+喷气增焓 Air return(exhaust) super heat degree+enhanced vapor injection	T0055	PCH-SD1G	电子膨胀阀 Electronic expansion valve	DPF、DPFS系列 DPF、DPFS series	2	一路主、一路辅 图5 One main way, one auxiliary Pic 5	
				压力传感器 Pressure sensor	NS-P321-30-20barG	0		201
				温度传感器 Temperature sensor	NTC5K3470	5		
4	排气过热度+喷液冷却 Air exhaust super heat degree+liquid injecting cooling	T0055	PCH-SD1L	电子膨胀阀 Electronic expansion valve	DPF、DPFS系列 DPF、DPFS series	2	一路主、一路辅 图6 One main way, one auxiliary Pic 6	
				压力传感器 Pressure sensor	NS-P321-30-20barG	0		201
				温度传感器 Temperature sensor	NTC5K3470	3		
5	排气过热度控制 Air exhaust super degree	T0055	PCH-SD1N	电子膨胀阀 Electronic expansion valve	DPF、DPFS系列 DPF、DPFS series	1	一路主 图7 One main way Pic 7	
				压力传感器 Pressure sensor	NS-P321-30-20barG	0		201
				温度传感器 Temperature sensor	NTC5K3470	3		

系统应用 Application in system

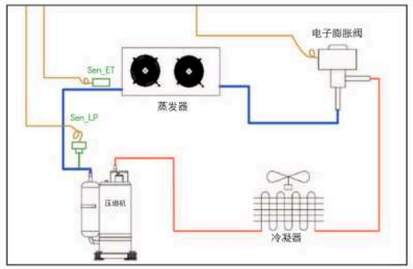

图1
回气过热度控制（一拖一）
Air return super heat degree control (1 by 1)

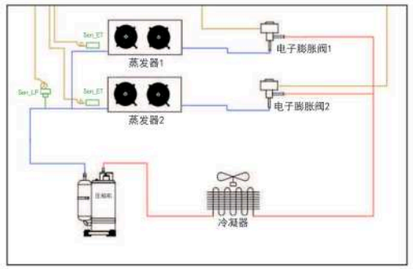

图2
回气过热度控制（一拖二）
Air return super heat degree control (1 by 2)

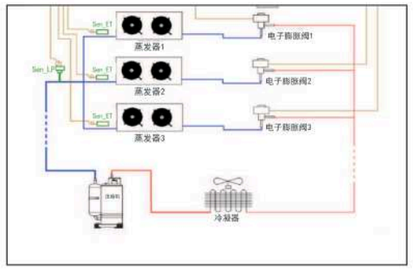

图3
回气过热度控制（一拖三）
Air return super heat degree control (1 by 3)

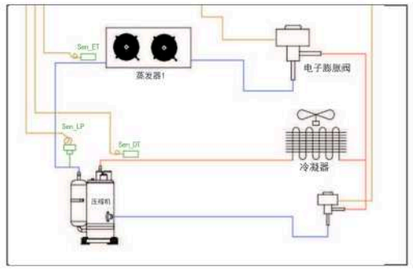

图4
热度+喷液冷却(一路主、一路辅)
Air return super heat degree+liquid injecting cooling
(One main way, one auxiliary)

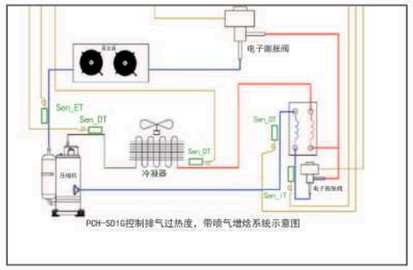

图5
回（排）气过热度+喷气增焓(一路主、一路辅)
Air return(exhaust) super heat degree+enhanced vapor injection
(One main way, one auxiliary)

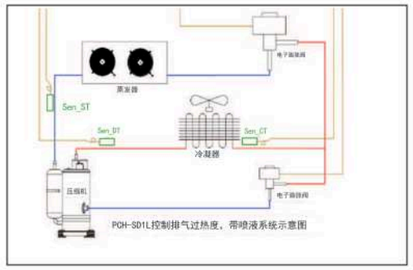

图6
排气过热度+喷液冷却(一路主、一路辅)
Air exhaust super heat degree+liquid injecting cooling
(One main way, one auxiliary)

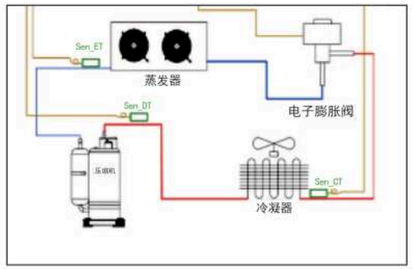

图7
排气过热度控制(一路主)
Air exhaust super degree(One main way)

外形尺寸 Overall dimension

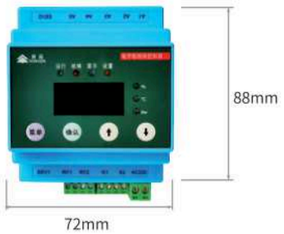

接线图 Wiring drawing

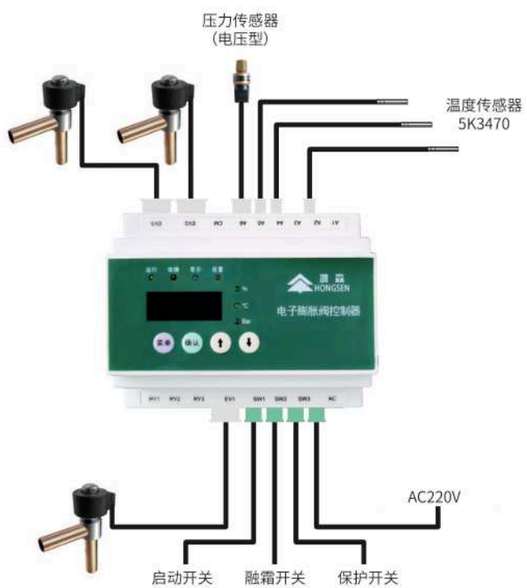

注：机组控制接线方式请参照说明书。
Note: Please refer to the instruction for detail of unit' s controlling wiring method

DPF/DPFS系列电子膨胀阀控制器
Controller for DPF/DPFS Series electric expansion valve

HS-1702

产品概述 Product Description

适用于SPF系列电子膨胀阀的过热度控制，以2相4拍双极励磁方式控制，提高系统的制冷能力。	It is suitable for super heat control of SPF series electronic expansion valves. It is controlled by 2 phase 4 beat bipolar excitation mode to improve the refrigerating capacity of the system.

特点 Features

• 多种制冷剂可选：R22、R134a、R404a、R410a、R507c; • 多种类电子膨胀阀：采用PID算法适用多种双极电子膨胀阀，也可以自定义膨胀阀参数; • MOP保护：蒸发压力超压保护； • LOP保护：蒸发压力低压保护； • 告警输出：一路无源继电器触点输出； • 集中监控：可通过RS485通信方式进行开、关机，参数设置，数据查看。	• More refrigerants available: R22、R134a、R404a、R410a、R507c; • more kinds of electronic expansion valve: the PID algorithm is applicable to various bipolar electronic expansion valve, and the parameters of the expansion valve can also be customized; • MOP protection: evaporative pressure overpressure protection; • LOP protection: evaporative pressure low-pressure protection; • Alarm output: one way passive relay contact output; • Centralized monitoring: ON-OFF, parameter setting, data check can be performed through RS485 communication.

技术参数 Technical Parameters

控制电源 control power	DC24V/650mA
使用环境 using environment	海拔低于2000米；温度-10℃～60℃，湿度：20%～85%，无凝露。（禁止在含酸、含碱等有腐蚀性的场合和易燃易爆的场合使用！） altitude below 2000meters; temperature -10℃～60℃, humidity: 20%～85%，no condensation .（No use in corrosive places with acid, alkali or inflammable and explosive places!）
配置 dispose	控制器 （HS-1702）1件， 常温温度传感器（NTC-NT05）2件， 压力传感器(77CP055) 1件，变压器（KBE4825） 1件， 备用电源（GFB300）1件 Accessories: Controller（GEC1702）*1， Normal temp. sensor（NTC-NT05）*2， Pressure sensor (77CP055)*1，transformer（KBE4825） *1， backup power（GFB300）*1

接线图 Wiring Lagout

配置一：常温温度传感器
Accessory Ⅰ:Normal temperature sensor

NTC-NT05

技术参数 Technical Parameters	
测量温度Test range	-50~60℃
NTC热敏电阻(thermistor)	B25/85=3435K±1%，R25=10Ω±1%
线长(cable length)	5m
不锈钢管(sensor size)	φ6 X 50
防护等级(protection level)	IP68

配置二：压力传感器
Accessory Ⅱ:pressure sensor

77CP055

技术参数 Technical Parameters	
量程范围 test range	-1~12bar
精度 Accuracy	0.5% FS(-20~85℃)
工作温度 working temp.	-40~125℃
螺纹接口 Connection thread	7/16-20UNF（内螺纹 Female）、带1/4喇叭口针阀顶开装置with depressor
接线方式input power	4~20Ma （红/黑，两线制，电流型 red/black，current mode）
连接线wire	AWG20 , L=3m

配置三：变压器 Accessory Ⅲ:Transformer

KBE4825

技术参数 Technical Parameters	
输入 input	230VAC，50/60HZ
输出 output	24V，MAX 10W
耐压 withstand voltage	3.5KW

配置四：备用电源 Accessory IV:Backup power

GFB300

产品概述 Product Description	
备用电源为超级电容模块，串联在供电电路中，可确保电源故障时保证控制器临时供电，立刻关闭链接的电子膨胀阀	The backup power supply is a super capacitor module, which is connected in series in the power supply circuit, which can ensure the temporary power supply of the controller in case of power failure, and immediately close the linked electronic expansion valve

技术参数 Technical Parameters	
输入 input	24V/400mA
输出 output	12V/400mA
容量 capacity	50mA.h

Ex1230电子膨胀阀控制器
Ex 1230 electronic expansion valve controller

产品概述 Product Description	
主要用于超市冷柜系统DPF/DPFS系列电子膨胀阀的过热度控制，以4相8拍1-2相励磁驱动方式精确控制冷媒流量，提高系统COP，达到快速制冷和节能的目的。	It is mainly used for super heat control of DPF/DPFS series electronic expansion valves in supermarket refrigerator system. It uses 4-phase 8- beat 1-2 phase excitation drive method to accurately control refrigerant flow, improve system COP and achieve the purpose of rapid cooling and energy saving.

特点 Features	
• 集成有风机控制、除霜控制、供液阀控制、膨胀阀开度调节等，兼顾冷柜/冷库温控器功能； • 通过压力对应温度控制过热度，过热度波动小、库温保持更平稳； • 多种内置程序保证电子膨胀阀控制精准,确保制冷系统安全、可靠运行； • 采用变过热度算法控制，使制冷系统效率更高； • 可多个温控共用一个压力值控制，适合一个主机拖多冷风机或者冷柜场合，安装调试简便； • 带RS485通信口，可接外部网络。	• Integrated with fan control, de-frost control, feed liquid valve control, expansion valve opening adjustment, taking into account the function of the temperature controller in refrigerator or refrigeration store; • The super heat degree is controlled by the pressure corresponding to temperature, whose fluctuation is low, and store temperature keeps more stable; • Various built-in programs ensure precise control of the electronic expansion valve, to make sure safe and reliable operation of the refrigeration system; • Control by means of changing super heat algorithm, to make the refrigeration system more efficient; • Multiple temperature controls can share one pressure value control, suitable for the occation with a host unit carrying several coolers or refrigerators, easy to install and commissioning; • Equipped with RS485 communication port, which can be connected with external network.

技术参数 Technical Parameters	
传感器长 Length of sensor	1.5 米(含探头) 1.5 meters (including probe)
感温元件 Temperature sensing element	NTC，R25Ⅱ = 5K,B25/50Ⅱ = 3470K
环境温度 Environment temperature	-10~45℃
工作湿度 Working humidity	5~85%RH (不结露) 5~85%RH(no condensation)
设定范围 Setting range	-40~120℃
显示范围 Display range	-50~130℃
电源电压 Power voltage	185~245Vac，50/60Hz
端子接线 Terminal wiring	导线不超过 2*1.5mm，或1*2.5mm lead wire no more than 2*1.5mm，or 1*2.5mm
整机尺寸 Dimension of whole machine	长 78 x 宽 34.5 x 深 71(毫米) length78 * width 34.5* depth 71(mm)
负载电流 Load current	5A，250Vac (阻性负载) 5A，250Vac (resistive load)
安装开孔 Installing hole	长 71 x 宽 29(毫米) length71 * width 29(mm)
防护等级 Protection grade	IP65(前面板) IP65 (front panel)

结构 Structure

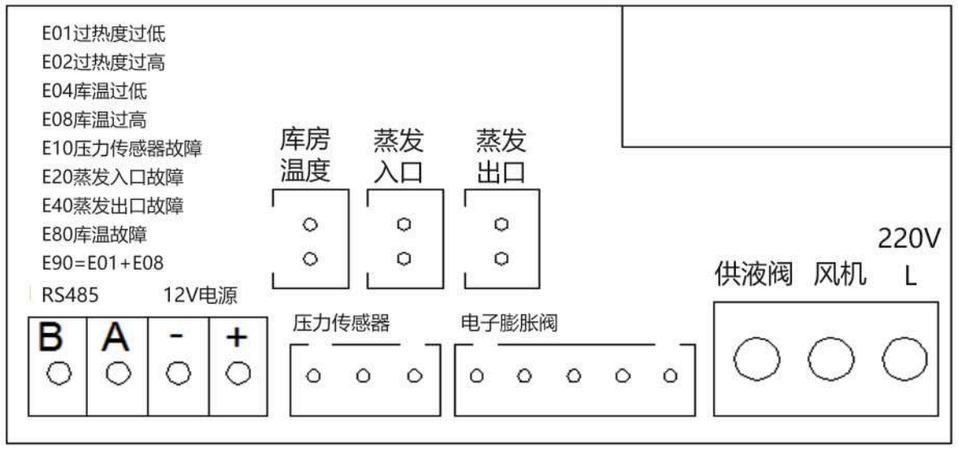

运用 Application

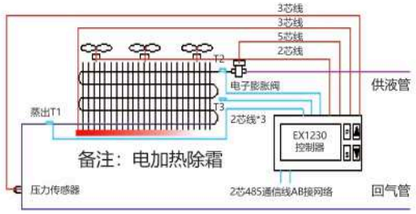

一拖一冷柜/冷库控制系统图（电除霜）

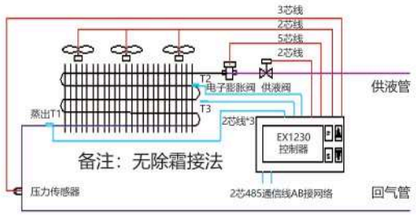

一拖一冷柜/冷库控制系统图（无除霜）

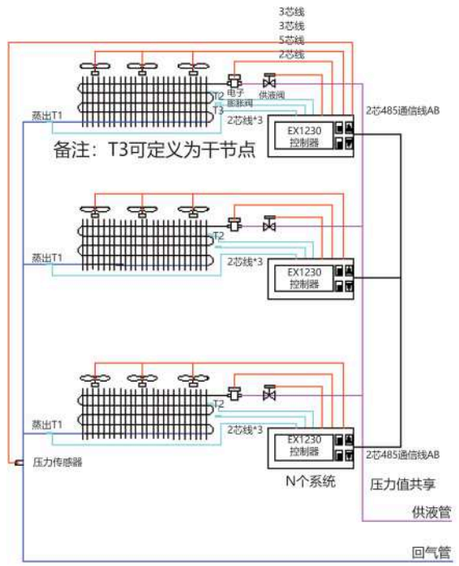

一拖多高温冷柜/冷库控制系统图

长 78(毫米) x 宽 34.5(毫米) x 深 71(毫米) length78 * width 34.5* depth 71(mm)

压力传感器 Pressure/temperature sensor

电流型电流型（P22）
Current type（P22）

电压型（P321）
Voltage type（P321）

产品概述 Product Description

用于检测制冷系统工况的压力值	Used to check the pressure value of refrigerating system condition

特点 Features

• EMC/EMI适应变频环境应用；	• EMC/EMI adapts frequency conversion environment application;
• 瞬间保护电压：DC16V；	• Instantaneous protective voltage: DC16V;
• 多种冷媒兼容，应用范围广；	• Compatible with multiple refrigerants, wide application range;
• 电源反接保护；	• Power supply reverse connection protection;
• 电流型压力传感器防结露设计；	• Anti-condensation design for current type pressure sensor

技术参数 Technical Parameters

工作电压 Working voltage	5±0.25VDC
介质温度 Medium temperature	-40℃~120℃
使用寿命 Service life	大于1000万次 more than10000000 times
适用量程 Applicable range	-1~50bar
输出信号 Output signa	电压/电流 voltage/current

选型表 Model selection

型号 Model	压力范围 Pressure range	安全过载 Safety overload	破坏压力 Breaking pressure	工作电源 Working voltage	输出信号 Output signal	综合精度 Comprehensive Precision
HS-P321-30-10barG	0-10bar	30bar	160bar	5VDC	0.5~4.5VDC	±2.5%F.S
HS-P321-30-20barG	0-20bar	60bar	160bar	5VDC	0.5~4.5VDC	±2.5%F.S
HS-P321-30-30barG	0-30bar	90bar	250bar	5VDC	0.5~4.5VDC	±2.5%F.S
HS-P321-30-45barG	0-45bar	90bar	250bar	5VDC	0.5~4.5VDC	±2.5%F.S
HS-P321-30-(-1~12)barG	-1~12bar	36bar	160bar	5VDC	0.5~4.5VDC	±2.5%F.S
HS-P224A-30-11barG	-1-11bar	60bar	160bar	24VDC(12~23VDC)	4~20mA	±1%F.S
HS-P224A-30-18barG	0-18bar	60bar	160bar	24VDC(12~23VDC)	4~20mA	±1%F.S
HS-P224A-30-30barG	0-30bar	90bar	250bar	24VDC(12~23VDC)	4~20mA	±1%F.S
HS-P224A-30-50barG	0-50bar	90bar	250bar	24VDC(12~23VDC)	4~20mA	±1%F.S

外形尺寸 Overall dimension

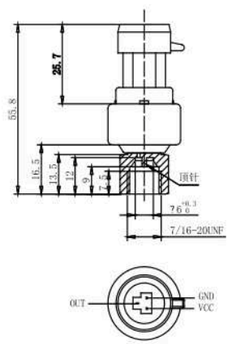

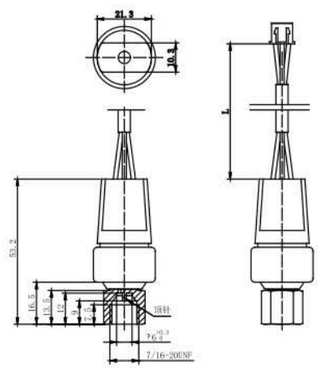

接线图 Wiring drawing

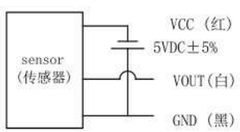

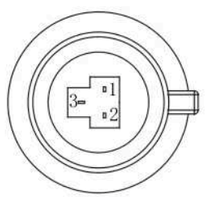

Pin	NS-P321-X2
1	GND
2	+5VDC
3	Vout

温度传感器 Temperature sensor

5K3470

产品概述 Product Description

用于检测制冷系统工况的温度值	Used to check the temperature value of refrigerating system condition

特点 Features

• 体积小，重量轻，防护性能好； • 温度偏差小，精度高 • 测量范围 test range：-50~150℃	• Small size, light weight, good protective performance • Small temperature deviation, high precision

型号 Model

NTC，R25Ⅱ = 5K，　B25/50Ⅱ = 3470K

电动调节阀系列

MOTORIZED REGULATING VALVE *Series*

独特设计，实现零压差开启；
双稳态低功率设计，能耗低；
大口径阀门，紧凑设计，重量轻。

Unique design to achieve zero pressure differential opening.
Bistable low power design with low energy consumption.
Large diameter valves, compact design and light weig.

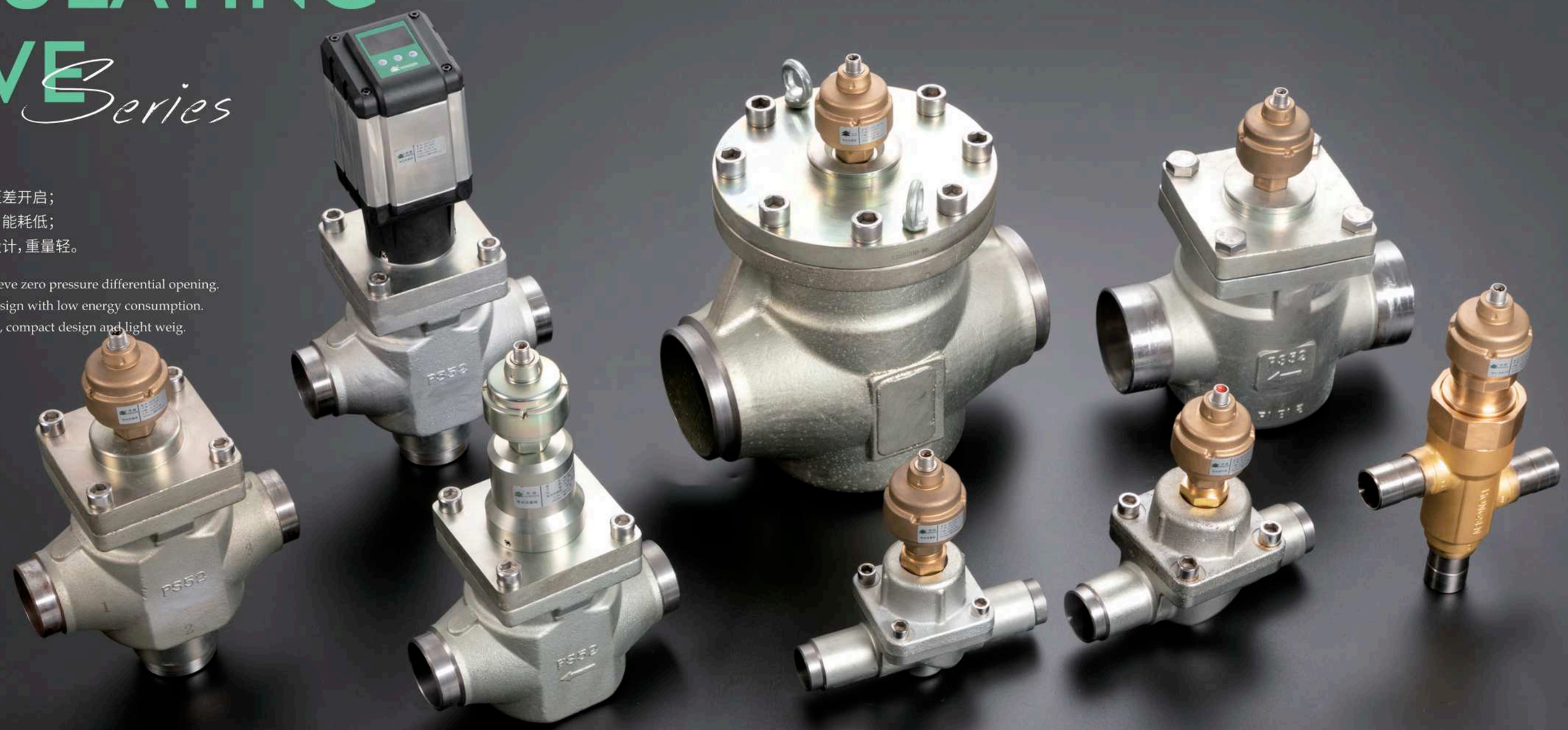

DHV型 电动调节阀
Model DHV Motorized Regulating Valve

DHV(D)

DHV(S)

产品概述 Product Description

- DHV(S/D) 型电动调节阀适用于系统低压差或0压差状态，不会出现不开阀或卡死现象。
- DHV(S/D) 型电动调节阀一体式阀体结构，漏点少，更可靠。
- DHV(S/D) 型电动调节阀开度可调，驱动器控制阀芯位置，实现阀门流量可调节。
- DHV(S/D) 型电动调节阀大口径双稳态阀，既是常开阀，又是常闭阀。
- DHV(S/D) 型电动调节阀可提供控制器，也可阀门单独供货。

- DHV (S / D) Motorized Regulating Valve is suitable for low pressure difference or zero pressure difference of the system.
- DHV(S/D) Motorized Regulating Valve body structure, less leaking point, more reliable.
- DHV (S / D) Motorized Regulating Valve adjustable opening, driver Control spool position, Valve flow adjustable.
- DHV (S / D) Motorized Regulating Valve large caliber bistable valve, both normally open valve and normally closed valve.
- DHV (S / D) Motorized Regulating Valve can be supplied either as a controller or as an individual valve.

产品特点 Product characteristics

- 专为工业应用场合设计，最大工作压力5.2MPa；
- 应用新材料，直接焊接接口，焊接性能良好，耐高低温性能好；
- 大口径阀门，设计紧凑，重量轻；
- 阀盖可以任意方向安装而不影响阀门功能；
- 步进电机驱动，稳定性好（IP65）；
- 双稳态设计，能耗低。
- 大开阀力，垃圾不易卡死。
- 活塞行程大，工作流量大。
- 控制器备电设计，接入备电电源，断电自动关阀。
- 焊接连接可达4.5in。

- Designed for industrial applications, maximum working pressure 5.2 MPa;
- Application of new materials, direct welding interface, welding performance is good, good resistance to high and low temperature;
- Large caliber valve, compact design, light weight;
- Bonnet can be installed in any direction without affecting valve function;
- Stepper motor drive, good stability (IP65);
- Bistable design, low energy consumption.
- Large opening valve force, garbage is not easy to jam.
- The piston stroke is large and the working flow is large.
- The controller is equipped with power supply, connected to the standby power supply, and the valve is automatically shut off when the power is cut off.
- Welding connection up to 4.5in.

技术参数 Technical Parameters

适用制冷剂 Applicable Refrigerants	HCFC/HFC(客户指定 Customer specified)
适用介质温度 Applicable Medium Temperature	-35℃ ~ +105℃
适用环境温度 Application Ambient Temperature of	-35℃ ~ +65℃
额定功率/电压 Rated power/voltage	6W/DC12V

选型表 Model Selection

型号Model	规格Spec 接口 Connection	开启压差△P(bar) △P(bar)		最大工作压力(bar) Max Operating Pressure(bar)	Kv值(m^3/h)
		最小Minimum	最大工作压力差MOPD 液体 LiquidMOP		
DHV(S)25-9	28	0	40	52	10
DHV(S)32-11	35				16
DHV(S)40-13	42				25
DHV(S)50-18	57				44
DHV(D)50-18	57				44
DHV(D)65-24	76				70
DHV(D)80-28	89				85
DHV(D)100-34	108				160
DHV(D)100-36	114.3				160
DHV(D)125-44	140.7				223
DHV(D)150-53	168.3				370

1) Kv值：密度为1吨/m^3的水在通过阀的压差等 于100KPa时的流量，单位为m^3/h；
2) 气态介质的MOPD约高1bar.
1) Kv value: The flow rate (m^3/h) of water of density 1t/m^3 passing through the valve with the pressure differential of 100 KPa.
2) The MOPD of gaseous medium is about 1 bar higher than that of liquid.

外形尺寸 Overall Dimension

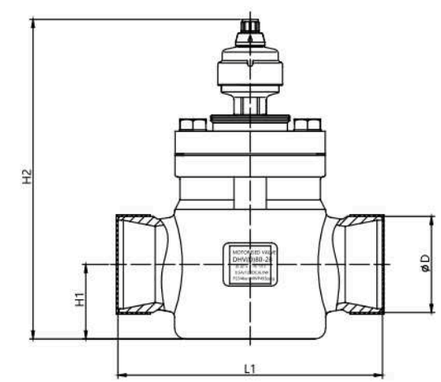

DHV(D)

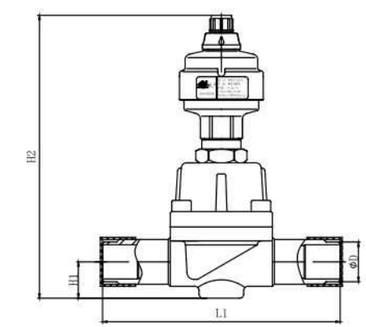

DHV(S)

型号Model	外形尺寸 External dimension				重量(Kg) Weight (Kg)
	D	L1	H1	H2	
DHV(S)25-9	28	170	26	203.5	2.8
DHV(S)32-11	35	193	29	209.5	3.5
DHV(S)40-13	42	207	32	218	4.9
DHV(S)50-18	57	207	39	236.8	7.3
DHV(D)50-18	57	200	52.5	251.5	10
DHV(D)65-24	76	230	69	294	15.5
DHV(D)80-28	89	245	69	294	16
DHV(D)100-34	108	300	94	365	34.38
DHV(D)100-36	114.3	300	94	365	34.54
DHV(D)125-44	140.7	348	146	495	65
DHV(D)150-53	168.3	445	160	550	118

HC-10 PID 控制器　HC-10 PID controller

产品概述 Product Description

HC-10通用型控制器采用PID控制规律，适用于驱动单级4相步进电机和双极2相步进电机式阀门， 对制冷系统的液位、压力或温度等工况的调节。	HC-10 general type controller adopts PID controlling rules, which is suitable to drive single stage 4 phase stepping motor and bipolar 2 phase stepping motor valve, and adjust the working conditions of the liquid level, pressure and temperature of the refrigerating system.

特点 Features

• 0-5V、0-10V或4-20mA标准输入信号； • 采用PID控制算法，适用范围广控制精准； • 具有手动、模拟量控制、PID自动控制多种控制方式； • 带RS485标准通信口，可接主机通讯。	• 0-5V、0-10V or 4-20mA standard input signal; • Adopt PID control algorithm with wide application range and precise control; • Multiple controlling method like manual, analog quantity control and PID automatic control; • Equipped with RS485 standard communication port, which can be connected with main machine.

技术参数 Technical Parameters

电源电压 Power voltage	24VDC
输入信号 Input signal	单路0-5V（含1-5V），0-20mA（含4- 20mA），0-10V（含2-10V）三种信号 single way 0-5V (including 1-5V), 0-20mA（including 4- 20mA），0-10V（including 2-10V）
输出电压 Output voltage	12VDC，（支持4 线、5 线、6 线制步进电机式电子膨胀阀） 12VDC，(support 4 wire, 5 wire, 6 wire system stepping motor electronic expansion valve)
RS485 通讯协议 RS485 communication protocol (ModbusRTU format) 二路报警输出触点信号 Two way alarm output contact signal	

接线图 Wiring drawing

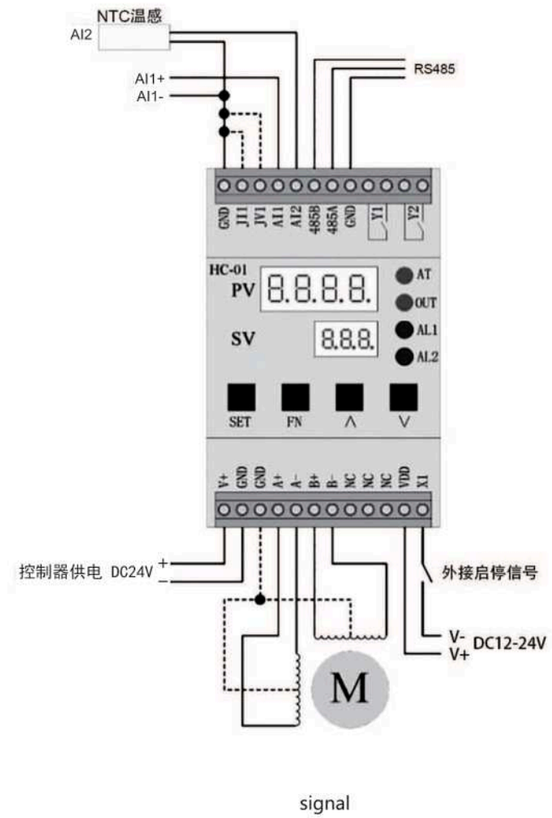

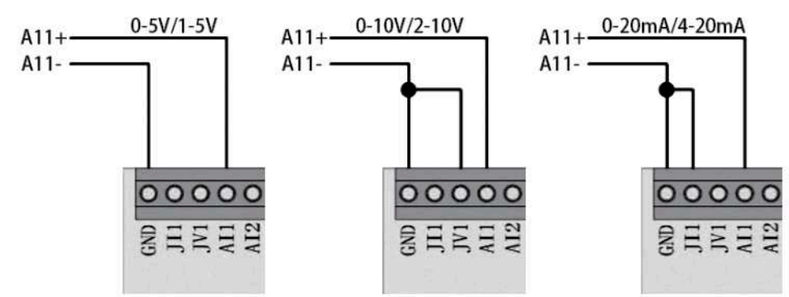

三种输入信号的接线方式
Wiring method for three types of input

控制器（HS888、HS888-2可选）

技术参数 Technical Parameters

电源电压 Power supply voltage	AC220V
备用电源 Emergency power supply	DC12V/2F
使用环境温度 Service ambient temperature	-20℃~+45℃
使用环境湿度 Environmental humidity	≤85%无凝露 No condensation.
双极驱动能力 Bipolar drive capability	最大输出电流(MAX Output Current): 1A
控制器驱动方式 Controller driving mode	无源驱动、AC220V有源驱动（可选）Without/With 220V driver

产品特点 Product characteristics

• 专用模块：鸿森电动调节阀开关阀控制模块，确保系统控制精确无误;
• 开/关阀信号输入：一路无源、AC220V有源（可选）开关量信号，用于控制器接收开阀或关阀信号。

• Special module: Hongsen Motorized Regulating Valve on-off valve control module to
ensure that the system control is accurate;
• Open / close valve signal input: a passive, AC220V active (optional) on-off signal for the controller to receive the open or close valve signal.

产品功能 Product function

HS888控制器：
1、开度设置；
2、脉冲数设置；
3、断电关阀。

HS888-2控制器：
1、开度设置；
2、脉冲数设置；
3、断电关阀；
4、一次开阀开度设置；
5、二次开启延时设置。

HS888 controller:
1. Opening setting;
2. Pulse number setting;
3. Power off valve.

HS888-2 controller:
1. Opening setting;
2. Pulse number setting;
3. Power off valve;
4. Setting the opening degree of the primary opening valve;
5. Setting the delay of secondary opening.

结构 Structure

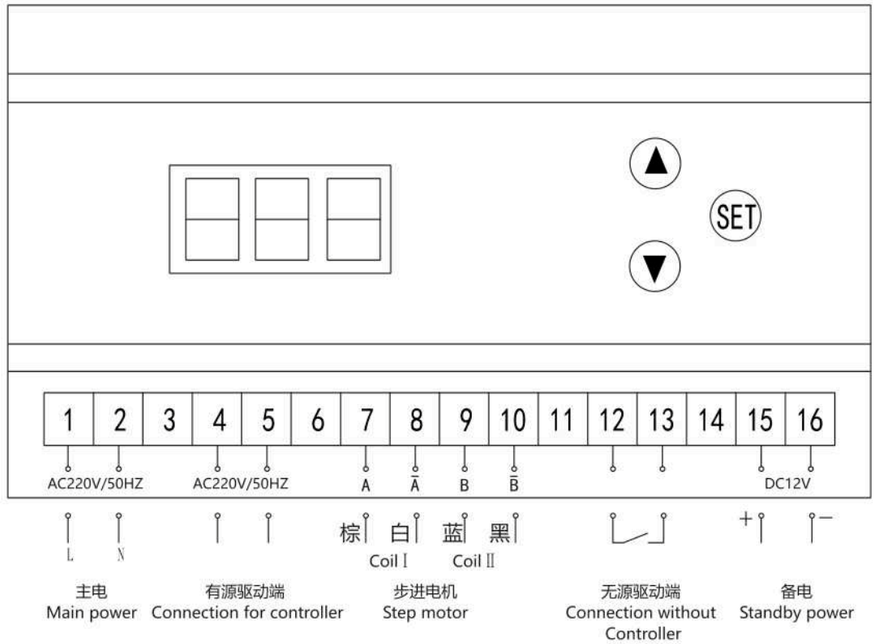

(A)棕： brown (Ā)白： white (B)蓝： blue (B̄) 黑： black

电磁阀系列

SOLENOID VALVE *Series*

专利线圈 低温升、大功率、防水性能好。
应用新材料，耐高温性能更好。
采用新工艺，阀口密封优良开启压力更小。

The patent coil has the advantages of low temperature rise, high power and good waterproof performance.
The new material has better heat resistance performance.
With new technology, the valve opening is excellent and the opening pressure is smaller.

HVH型活塞式电磁阀
Model HVH Piston Type Solenoid Valve

产品概述 Product Description

- HVH型活塞式电磁阀是二次开启式电磁阀，适用于单向流动。
- HVH型活塞式电磁阀用于冷冻、冷藏和空气调节装置的液体、吸气和热气管路上。
- HVH型活塞式电磁阀可提供多种电压的线圈，而阀体是通用的。
- HVH型活塞式电磁阀可提供整体供货，也可分体供货，即阀体和线圈分开单独供货。

- Model HVH piston type solenoid valve is a twice open-type solenoid valve to be suitable to one-way flow.
- Model HVH piston type solenoid valve is used on the liquid, air suction and not vapor pipes of the refrigeration, cold storage and air conditioning facilities.
- The coil of varies voltages is available for Model HVH piston type solenoid valve with a universal valve body.
- Model HVH piston type solenoid valve could be supplied in whole or in split means the valve body and coil could be supplied separately.

特点 Features

- 线圈为专利产品，整体密封设计，可有效 防水，使用寿命长。
- 多种交直流电磁线圈可供选择。
- 夹卡式电磁线圈拆卸安装方便。
- 独特的结构设计，开阀能力大。在电压波动大的状况下也能正常工作。
- 活塞行程大，确保阀流量大。

- The coil is a patented product, and the overall seal design is effective for waterproofing and long service life.
- A variety of AC and DC electromagnetic coils are available.
- The clamp type electromagnetic coil is easy to remove and install.
- Unique structural design and large valve opening capability. It can also be normal under the condition of large voltage fluctuation.Work.
- large piston stroke to ensure large valve flow.

技术参数 Technical Parameters

适用制冷剂 Applicable Refrigerants	HCFC or HFC(客户指定 Customer specified)
适用介质温度 Applicable Medium Temperature	-40℃~+140℃
线圈的适用环境温度 Application Ambient Temperature of Solenoid	-40℃~+65℃
线圈的标准电压 Standard Voltage of Solenoid	AC 380V,AC 220V/50Hz(也可按客户指定做 Customer design is available)
线圈的允许电压波动 Allowable Voltage Fluctuation for Solenoid	+10%~-15%
线圈的连接 Connection of Solenoid	IP67附带接线盒

选型表 Model Selection

型号Model	规格 Size	开启差值ΔP(bar)		最大工作压力(bar) Max.Operating Pressure	Kv值 KV(m³/h)
	焊接口 Weld Connection	最小 Min.	最大工作压力差 MOPD 液体 Liquid MOP		
HVH3-2T	1/4ODF	0.05	31	45	0.4
HVH8-3T	3/8ODF	0.05	31	45	0.8
HVH10-4T	1/2ODF	0.05	31	45	1.4
HVH10-5T	5/8ODF	0.05	31	45	1.9
HVH15-6T	3/4ODF	0.05	31	45	2.6
HVH15-7T	7/8ODF	0.05	31	45	2.8

1) Kv值：密度为1吨/m³的水在通过电磁阀的压差等于100KPa时的流量，单位为m³/h；
2) 气态介质的MOPD约高1bar.
1) Kv value: The flow rate (m³/h) of water of density 1t/m³ passing through the solenoid valve with the pressure differential of 100 KPa.
2) The MOPD of gaseous medium is about 1 bar higher than that of liquid.

型号Model	名义制冷量 KWNominal Refrigerating Capacity kW											
	液体 Liquid				吸气 Air Suction				热蒸汽 Hot Vapor			
	R22/R407C	R134a	R404A/R507	R410A	R22/R407C	R134a	R404A/R507	R410A	R22/R407C	R134a	R404A/R507	R410A
HVH3-2T	8.05	7.40	5.60	8.04	0.90	0.65	0.80	1.16	3.70	2.95	3.00	5.59
HVH8-3T	16.10	14.80	11.20	16.08	1.80	1.30	1.60	2.32	7.40	5.90	6.00	11.18
HVH10-4T	28.18	25.90	19.60	28.14	3.15	2.28	2.80	4.06	12.95	10.33	10.50	19.57
HVH10-5T	38.24	35.15	26.60	38.19	4.28	3.09	3.80	5.51	17.58	14.01	14.25	26.55
HVH15-6T	52.33	48.10	36.40	52.26	5.85	4.23	5.20	7.54	24.05	19.18	19.50	36.34
HVH15-7T	56.35	51.80	39.20	56.28	6.30	4.55	5.60	8.12	25.90	20.65	21.00	39.13

液体和吸气名义制冷量的工况条件为
The working condition the nominal refrigerating capacity of liquid and air suction is as follows:
蒸发温度 tc=-10°CEvaporation Temperature: te = -10°C;
阀前液体温度 t1=+25°C Liquid Temperature before Valve: t1 = +25°C;
经过电磁阀的压力降 ΔP=15KPa Pressure Drop after Solenoid Valve: △P = 15KPa

热气名义制冷量的工况条件为
The working condition the nominal refrigerating capacity of hot vapor is as follows:
冷凝温度 tc=+40°C Condensation Temperature: tc = +40°C;
经过电磁阀的压力降 ΔP=0.8bar Pressure Drop after Solenoid Valve: △P = 0.8bar;
热气温度 th=+65°C Hot Vapor Temperature: th = +65°C;
液体制冷剂过冷度 Δt_{sub}=4K Liquid Refrigerant Overcooding: △t_{sub}= 4K

结构 Structure

1.防尘帽 dust cap
2.接管 pice
3.阀体 valve body
4.活塞 piston
5.密封垫 PTFE gasket
6.活塞环 piston ring
7.密封圈 seal ring
8.阀座部件 valve seat
9.复位弹簧 reset spring
10.芯铁 core iron
11.电磁线圈 solenoid coil
12.阀针 valve needle

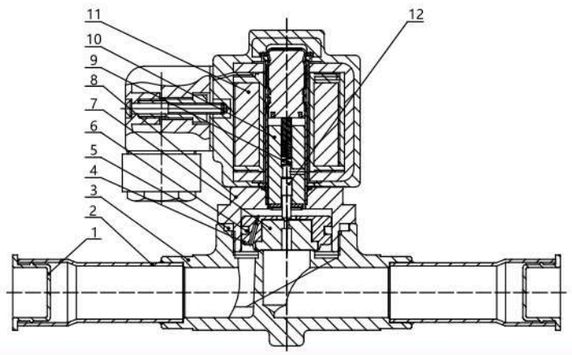

外形尺寸 Overall Dimension

型号Model	外形尺寸Overall Dimension						重量(kg) Weight(kg)
	B	D	L1	L	H1	H2	
HVH3-2T	77	Φ6.5	7	102	14	77	0.55
HVH8-3T	77	Φ10.1	8	124	14	77	0.63
HVH10-4T	77	Φ12.8	10	138	17	82	0.65
HVH10-5T	77	Φ16.1	14	156	17	82	0.65
HVH15-6T	77	Φ19.2	16	172	17	84	0.70
HVH15-7T	77	Φ22.3	17	180	17	84	0.70

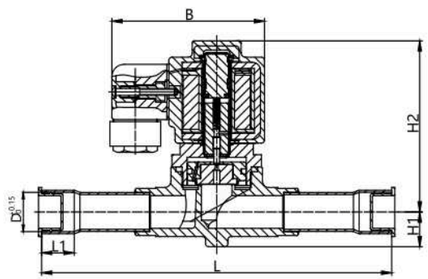

HVD型活塞式电磁阀
Model HVD Piston Type Solenoid Valve

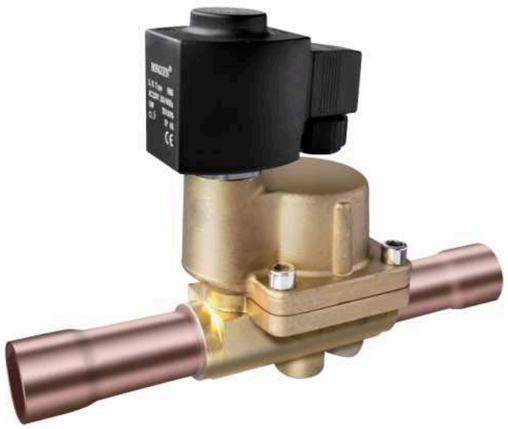

产品概述 Product Description

- HVD型活塞式电磁阀是二次开启式电磁阀，适用于单向流动。
- HVD型活塞式电磁阀用于冷冻、冷藏和空气调节装置的液体、吸气和热气管路上。
- HVD型活塞式电磁阀可提供多种电压的线圈，而阀体是通用的。
- HVD型活塞式电磁阀可提供整体供货，也可分体供货，即阀体和线圈分开单独供货。

- Model HVH piston type solenoid valve is a twice open-type solenoid valve to be suitable to one-way flow.
- Model HVH piston type solenoid valve is used on the liquid, air suction and hot vapor pipes of the refrigeration, cold storage and air conditioning facilities.
- The coil of varies voltages is available for Model HVH piston type solenoid valve with a universal valve body.
- Model HVH piston type solenoid valve could be supplied in whole or in split, that means valve body and coil could be supplied separately.

特点 Features

- 专利线圈，防水性能好（IP65）。
- 应用新材料，耐高低温性能好。
- 24W的大功率电磁线圈，开阀能力大。
- 活塞行程大，工作流量大。
- 多种交流和直流电磁线圈可供选择。
- 焊接连接可达1-5/8in。

- The proprietary coil has perfect waterproof performance (IP65).
- Using new material,it has performance in hign and low temperature applicateion.
- The 24W high-power solenoid coil has high capability to open the valve.
- The high flow rate is assured by a big piston stroke.
- Various AC and DC solenoid coils are available for choice.
- 1-5/8 inch is the maximum welded connection size.

技术参数 Technical Parameters

适用制冷剂 Applicable Refrigerants	HCFC or HFC(客户指定 Customer specified)
适用介质温度 Applicable Medium Temperature	-30℃~+105℃
线圈的适用环境温度 Application Ambient Temperature of Solenoid	-40℃~+65℃
线圈的标准电压 Standard Voltage of Solenoid	AC 380V,AC 220V/50Hz(也可按客户指定做 Customer design is available)
线圈的允许电压波动 Allowable Voltage Fluctuation for Solenoid	+10%~-15%
线圈的连接 Connection of Solenoid	3线插入式标准连接器 Standard 3-wire insert connector

选型表 Model Selection

型号Model	规格Size 焊接口 Weld Connection	开启差值ΔP(bar) 最小Min	开启差值ΔP(bar) 最大工作压力差MOPD 液体 LiquidMOP	最大工作压力(bar) Max.Operating Pressure	Kv值 Kv(m³/h)
HVD25-9T	1-1/8ODF	0.2	31	45	10
HVD32-11T	1-3/8ODF	0.2	31	45	16
HVD40-13T	1-5/8ODF	0.2	31	45	25

1）Kv值：密度为1吨/m³的水在通过电磁阀的压差等 于100KPa时的流量，单位为m³/h；
2）气态介质的MOPD约高1bar.
1) Kv value: The flow rate (m³/h) of water of density 1t/m³ passing through the solenoid valve with the pressure differential of 100 KPa.
2) The MOPD of gaseous medium is about 1 bar higher than that of liquid.

型号Model	名义制冷量 KWNominal Refrigerating Capacity kW											
	液体 Liquid				吸气 Air Suction				热蒸汽 Hot Vapor			
	R22/R407C	R134a	R404A/R507	R410A	R22/R407C	R134a	R404A/R507	R410A	R22/R407C	R134a	R404A/R507	R410A
HVD25	201.25	185.00	140.00	201.00	22.50	16.25	20.00	29.00	92.50	73.75	75.00	139.75
HVD32	322.00	296.00	224.00	321.60	36.00	26.00	32.00	46.40	148.00	118.00	120.00	223.60
HVD40	503.13	462.50	350.00	502.50	56.25	40.63	50.00	72.50	231.25	184.38	187.50	349.38

液体和吸气名义制冷量的工况条件为
The working condition the nominal refrigerating capacity of liquid and air suction is as follows:
蒸发温度 tc=-10°CEvaporation Temperature: te = -10℃;
阀前液体温度 t1=+25°C Liquid Temperature before Valve: t1 = +25℃;
经过电磁阀的压力降 ΔP=15KPa Pressure Drop after Solenoid Valve: △P = 15KPa

热气名义制冷量的工况条件为
The working condition the nominal refrigerating capacity of hot vapor is as follows:
冷凝温度 tc=+40°C Condensation Temperature: tc = +40℃;
经过电磁阀的压力降 ΔP=0.8bar Pressure Drop after Solenoid Valve: △P = 0.8bar;
热气温度 th=+65°C Hot Vapor Temperature: th = +65℃;
液体制冷剂过冷度 Δt_{sub}=4K Liquid Refrigerant Overcooding: $\triangle t_{sub}$= 4K

结构 Structure

1.电磁线圈 solenoid coil
2.芯铁部件 core iron
3.阀座部件 valve seat
4.阀盖 bonnet
5.复位弹簧 reset spring
6.活塞部件 piston
7.活塞芯 piston core
8.密封垫 PTFE gasket
9.阀体 valve body
10.防尘帽 dust cap
11.接管 pipe
12.O形圈 O-ring
13.阀芯 value element
14.阀芯垫片 value element gasket
15.密封环 seal ring

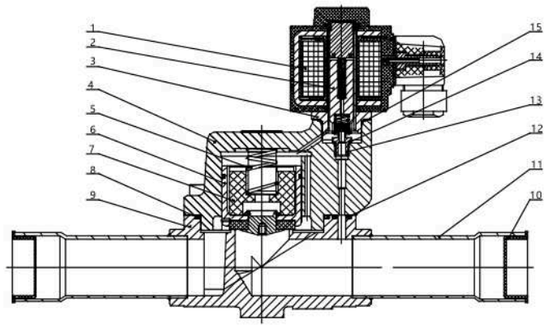

外形尺寸 Overall Dimension

型号 Model	外形尺寸Overall Dimension A	B	D	L1	L2	H1	H2	重量(kg) Weight(kg)
HVD25-9T	103	85	Φ28.7	20	246.5	26.5	139	3.02
HVD32-11T	110	85	Φ35.2	25	281.0	28	145	3.45
HVD40-13T	119	85	Φ41.5	29	316.0	32	150	4.60

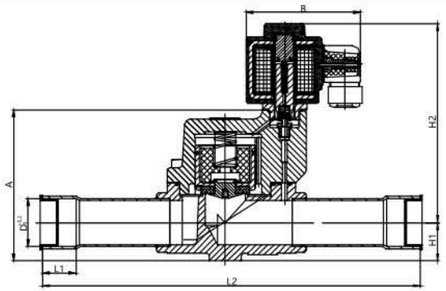

HVP型活塞式电磁阀
Model HVP Piston Type Solenoid Valve

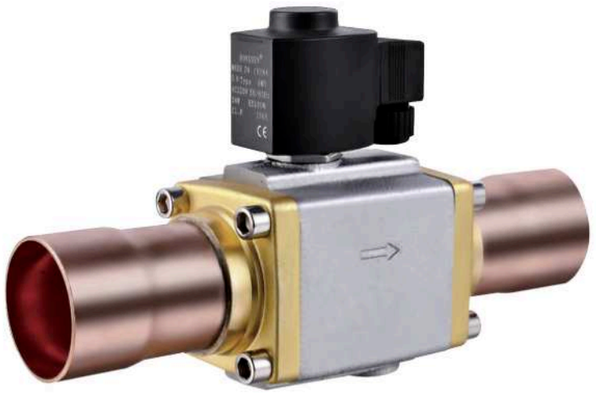

产品概述 Product Description

- HVP型活塞式电磁阀是二次开启式电磁阀，适用于单向流动。
- HVP型活塞式电磁阀用于冷冻、冷藏和空气调节装置的液体、吸气和热气管路上。
- HVP型活塞式电磁阀可提供多种电压的线圈，而阀体是通用的。
- HVP型活塞式电磁阀可提供整体供货，也可分体供货，即阀体和线圈分开单独供货。

- Model HVP piston type solenoid valve is a twice open-type solenoid valve to be suitable to one-way flow.
- Model HVP piston type solenoid valve is used on the liquid, air suction and not vapor pipes of the refrigeration, cold storage and air conditioning facilities.
- The coil of varies voltages is available for Model HVP piston type solenoid valve with a universal valve body.
- Model HVP piston type solenoid valve could be supplied in whole or in split, that means valve body and coil could be supplied separately.

特点 Features

- 专利线圈，防水性能好（IP65）。
- 应用新材料，耐高低温性能好。
- 24W的大功率电磁线圈，开阀能力大。
- 活塞行程大，工作流量大。
- 多种交流和直流电磁线圈可供选择。
- 焊接连接可达2-1/8in。

- The proprietary coil has perfect waterproof performance (IP65).
- Using new material,it has performance in hign and low temperature applicateion.
- The 24W high-power solenoid coil has high capability to open the valve.
- The high flow rate is assured by a big piston stroke.
- Various AC and DC solenoid coils are available for choice.
- 2-1/8 inch is the maximum welded connection size.

技术参数 Technical Parameters

适用制冷剂 Applicable Refrigerants	HCFC or HFC(客户指定 Customer specified)
适用介质温度 Applicable Medium Temperature	-30℃~+105℃
线圈的适用环境温度 Application Ambient Temperature of Solenoid	-40℃~+65℃
线圈的标准电压 Standard Voltage of Solenoid	AC 380V,AC 220V/50Hz(也可按客户指定做 Customer design is available)
线圈的允许电压波动 Allowable Voltage Fluctuation for Solenoid	+10%~-15%
线圈的连接 Connection of Solenoid	3线插入式标准连接器 Standard 3-wire insert connector

选型表 Model Selection

型号Model	规格Size 焊接口 Weld Connection	开启差值ΔP(bar) 最小Min	开启差值ΔP(bar) 最大工作压力差MOPD 液体 LiquidMOP	最大工作压力(bar) Max Operating Pressure(bar)	Kv值 Kv(m³/h)
HVP25	1-1/8 ODF	0.2	31	45	10
HVP32	1-3/8 ODF	0.2	31	45	16
HVP40	1-5/8 ODF	0.2	31	45	25
HVP54	2-1/8 ODF	0.2	31	45	28

1）Kv值：密度为1吨/m³的水在通过电磁阀的压差等 于100KPa时的流量，单位为m³/h；
2）气态介质的MOPD约高1bar.
1) Kv value: The flow rate (m³/h) of water of density 1t/m³ passing through the solenoid valve with the pressure differential of 100 KPa.
2) The MOPD of gaseous medium is about 1 bar higher than that of liquid.

型号Model	名义制冷量 KWNominal Refrigerating Capacity kW											
	液体 Liquid				吸气 Air Suction				热蒸汽 Hot Vapor			
	R22/R407C	R134a	R404A/R507	R410A	R22/R407C	R134a	R404A/R507	R410A	R22/R407C	R134a	R404A/R507	R410A
HVP25	201.25	185.00	140.00	201.00	22.50	16.25	20.00	29.00	92.50	73.75	75.00	139.75
HVP32	322.00	296.00	224.00	321.60	36.00	26.00	32.00	46.40	148.00	118.00	120.00	223.60
HVP40	503.13	462.50	350.00	502.50	56.25	40.63	50.00	72.50	231.25	184.38	187.50	349.38
HVP54	563.50	518.00	392.00	562.80	63.00	45.50	56.00	81.20	259.00	206.50	210.00	391.30

液体和吸气名义制冷量的工况条件为
The working condition the nominal refrigerating capacity of liquid and air suction is as follows:
蒸发温度 tc=-10°CEvaporation Temperature: te = -10℃;
阀前液体温度 t1=+25°C Liquid Temperature before Valve: t1 = +25℃;
经过电磁阀的压力降 ΔP=15KPa Pressure Drop after Solenoid Valve: △P = 15KPa

热气名义制冷量的工况条件为
The working condition the nominal refrigerating capacity of hot vapor is as follows:
冷凝温度 tc=+40°C Condensation Temperature: tc = +40℃;
经过电磁阀的压力降 ΔP=0.8bar Pressure Drop after Solenoid Valve: △P = 0.8bar;
热气温度 th=+65°C Hot Vapor Temperature: th = +65℃;
液体制冷剂过冷度 Δt_{sub}=4K Liquid Refrigerant Overcooding: Δt_{sub}= 4K

结构 Structure

1.阀体valve body
2.活塞部件piston
3.弹簧spring
4.活塞芯piston core
5.密封座sealing seat
6.法兰组件Flange assembly
7.防尘帽dust cap
8.定位销dowel pin
9.O形圈O-ring
10. 密封垫 PTFE gasket
11.电磁线圈（24W）solenoid coil(24W)
12.芯铁部件core iron
13.复位弹簧reset spring
14.阀座部件valve seat
15.密封环seal ring
16.阀芯value element
17.阀芯垫片value element gasket
18.过滤网组件filter assembly
19.挡圈retainer ring
20.螺钉screw

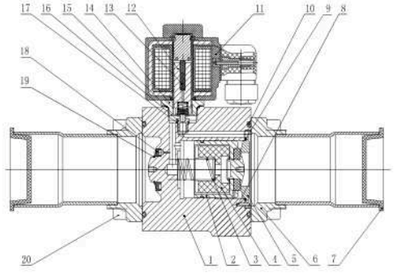

外形尺寸 Overall Dimension

型号 Model	外形尺寸Overall Dimension A	B	D	L1	L2	H1	H2	重量(kg) Weight(kg)
HVP25	100	85	Φ28.7	20	281.5	51.5	111	4.522
HVP32	100	85	Φ35.2	25	281.5	51.5	111	4.562
HVP40	100	85	Φ41.5	29	281.5	51.5	111	4.708
HVP54	100	85	Φ54.2	34	281.5	51.5	111	4.778

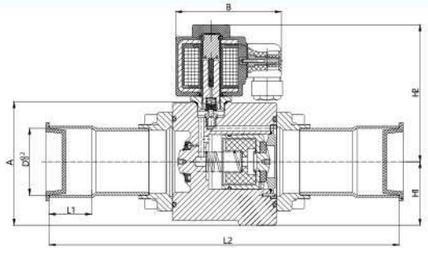

HV型电磁阀
Model HV solenoid valve

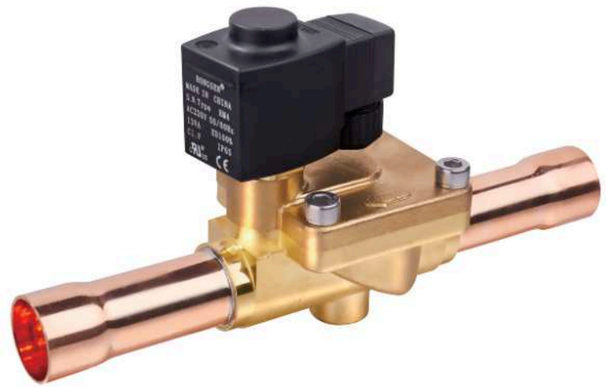

产品概述 Product Description

- HV型电磁阀是一次开启式或二次开启式电磁阀，适用于单向流动。
- HV型电磁阀用于冷冻、冷藏和空气调节装置的液体、吸气和热气管路上。
- HV型电磁阀的阀座与密封处具有很好的密封性。
- HV型电磁阀可提供多种电压的线圈。
- HV型电磁阀可提供整体供货，也可分体供货，即阀体和线圈分开单独供货。

- Model HV solenoid valve is a one-step on/off or two-step on/off solenoid valve, which is applicable to one-way flow.
- Model HV solenoid valve is used on the piping of liquid, suction gas or hot air on the freezing, cold storage and air conditioner units.
- The valve seat and seals of Model HV solenoid valve have excellent sealing performance.
- Model HV solenoid valve could be supplied with coils of varied voltage.
- Model HV solenoid valve could be supplied in assembly or in separate components, that is, the valve body and the coil could be supplied separately.

特点 Features

- 可提供常闭（NC）型阀。
- 可提供多种接口尺寸。
- 多种电源的电磁线圈可选择。
- 功率9W的电磁线圈，最大工作压差（MOPD）可达3.1MPa。
- 夹卡式电磁线圈只需一把螺丝刀可简单地拆卸。
- 可用于冷冻、冷藏和空气调节装置的各种场合。
- 使用寿命长的密封线圈，可在恶劣环境条件下使用。

- Only NC type solenoid valve is available.
- Coils of various power supply are available for choice.
- For 9W solenoid,MOPD is up to 3.1 MPa.
- For clamping type solenoid valve,it is simple and iust need one screwdriver in installation.
- It is suitable to various application in freezing,cold storage and air conditioner units.
- The sealed coil has a long service life and could be used in adverse circumstances.
- 认证 Certification • ISO 9001 • QS（XK-015-00246） • 线圈CE UL

技术参数 Technical Parameters

适用制冷剂 Applicable Refrigerants	HCFC、HFC 及相应介质粘度 ≤2° E 润滑机油HCFC、HFC and related medium viscosity ≤2° E lubricant oil
适用介质温度 Applicable Medium Temperature	-30℃~+105℃
线圈的适用环境温度 Application Ambient Temperature of Solenoid	-40℃~+65℃
线圈的标准电压 Standard Voltage of Solenoid	AC380V、220V、110V、24V/50、60Hz、DC12V
线圈的允许电压波动 Allowable Voltage Fluctuation for Solenoid	+10%~-15%
线圈的连接 Connection of Solenoid	3线插入式标准 连接器 Standard 3-wire insert connector

选型表 Model Selection

结构Structure	型号Model	接口 Connection 规格Spec	接口 Connection 型式Type	开启压差ΔP(bar) 最小 Min.	开启压差ΔP(bar) 最大工作压力差 MOPD 液体 Liquid MOP	最大工作压力(bar) Max.Operating Pressure	Kv值(m^3/h)
直接开启式 Direct Operated	HV3-2	1/4	螺口 SAE	0.0	31（常闭 close） 21（常开 open）	45	0.2
	HV3-2T		焊口 ODF				
	HV3-3	3/8	螺口 SAE				0.27
	HV3-3T		焊口 ODF				
膜片二次开启式 Servo-Operated	HV8M3		螺口 SAE	0.05			0.8
	HV8M3T		焊口 ODF				
	HV8M4	1/2	螺口 SAE				
	HV8M4T		焊口 ODF				
	HV10M4		螺口 SAE				2.2
	HV10M4T		焊口 ODF				
	HV10M5	5/8	螺口 SAE				
	HV10M5T		焊口 ODF				
	HV15M5		螺口 SAE	0.2			2.6
	HV15M5T		焊口 ODF				
	HV15M6	3/4	螺口 SAE				2.6
	HV15M6T		焊口 ODF				
	HV20M7T	7/8					5.7
	HV25M9T	1-1/8					10

1）Kv值：密度为1吨/m^3的水在通过电磁阀的压差等 于100KPa时的流量，单位为m^3/h；
2）气态介质的MOPD约高1bar.
1）Kv value: The flow rate (m^3/h) of water of density 1t/m^3 passing through the solenoid valve with the pressure differential of 100 KPa.
2) The MOPD of gaseous medium is about 1 bar higher than that of liquid.

型号Model	名义制冷量 KWNominal Refrigerating Capacity kW											
	液体 Liquid				吸气 Air Suction				热蒸汽 Hot Vapor			
	R22/R407C	R134a	R404A/R507	R410A	R22/R407C	R134a	R404A/R507	R410A	R22/R407C	R134a	R404A/R507	R410A
HV3-3T	4.03	3.70	2.80	4.02	0.45	0.33	0.40	0.58	1.85	1.48	1.50	2.80
HV8M3T	16.10	14.80	11.20	16.08	1.80	1.30	1.60	2.32	7.40	5.90	6.00	11.18
HV10M4T HV10M5T	38.24	35.15	26.60	38.19	4.28	3.09	3.80	5.51	17.58	14.01	14.25	26.55
HV15M5T	52.33	48.10	36.40	52.26	5.85	4.23	5.20	7.54	24.05	19.18	19.50	36.34
HV15M7T HV20M7T	100.63	92.50	70.00	100.50	11.25	8.13	10.00	14.50	46.25	36.88	37.50	69.88
HV25M9T	201.25	185.00	140.00	201.00	22.50	16.25	20.00	29.00	92.50	73.75	75.00	139.75

液体和吸气名义制冷量的工况条件为
The working condition the nominal refrigerating capacity of liquid and air suction is as follows:
蒸发温度 te=-10°CEvaporation Temperature: te = -10°C;
阀前液体温度 t1=+25°C Liquid Temperature before Valve: t1 = +25°C;
经过电磁阀的压力降 ΔP=15KPa Pressure Drop after Solenoid Valve: △P = 15KPa

热气名义制冷量的工况条件为
The working condition the nominal refrigerating capacity of hot vapor is as follows:
冷凝温度 tc=+40°C Condensation Temperature: tc = +40°C;
经过电磁阀的压力降 ΔP=0.8bar Pressure Drop after Solenoid Valve: △P = 0.8bar;
热气温度 th=+65°C Hot Vapor Temperature: th = +65°C;
液体制冷剂过冷度 Δt_{sub} =4K Liquid Refrigerant Overcooding: $\triangle t_{sub}$= 4K

结构 Structure

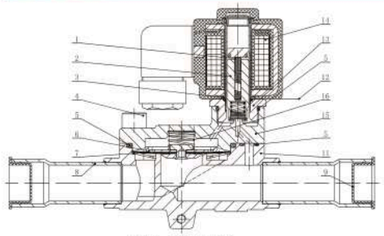

HV15M、HV20M、HV25M

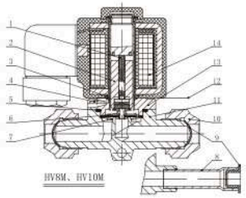

HV8M、HV10M

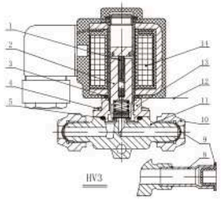

HV3

1.回复弹簧 recovery spring 2.芯铁部件 iron core（改性PTFE密封）(modified PTEE sealing) 3.耐油橡胶oil-resistance rubber 4.紧固螺钉（4个）fastening screw(4 pieces) 5. 密封垫 PTFE gasket 6.阀芯部件 value core（移动式）（改性PTFE复合膜片）(mobile)（modified PTFE composite diaphragm） 7.挡片 flapper 8.铜接管 copper tube 9. 防尘帽 dust cap 10.接管螺母 connection tube nut 11.阀体 valve body 12.阀盖部件 valve cover 13.电磁线圈（9W）solenoidcoils(9W) 14.阀盖 valve cover 15.大回复弹簧 big recovery spring

外形尺寸 Overall Dimension

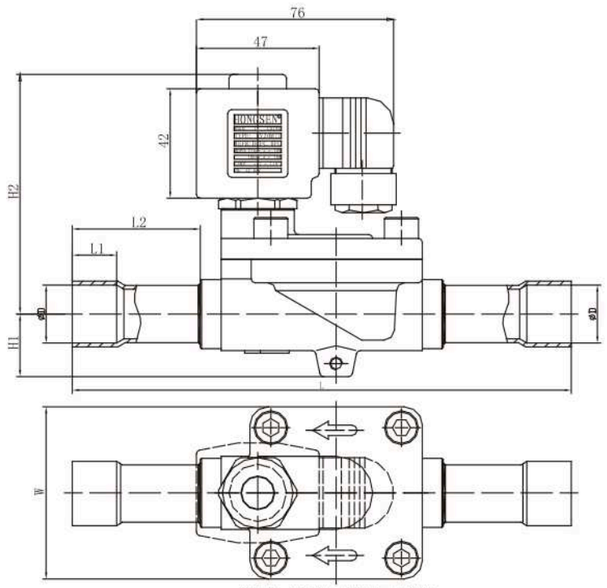

HV15M、HV20M、HV25M、HV32M

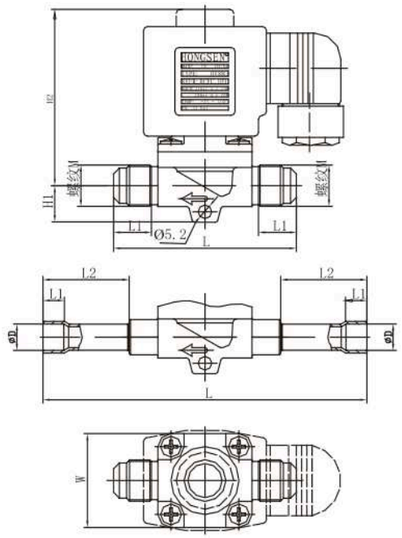

HV3、HV8M、HV10M

型号Model	外形尺寸 Overall Dimension								
	H1	H2	W	L	L1	L2	ØD	螺纹 M	
HV3-2	14	66	30	78	14.5	——	——	7/16-20UNF	
HV3-2T	14	66	30	102	7	27	6.5	——	
HV3-3	14	66	30	78	14.5	——	——	5/8-18UNF	
HV3-3T	14	66	30	114	8	35	10.1	——	
HV8M3	14	67	36	96	16	——	——	5/8-18UNF	
HV8M3T	14	67	36	124	8	33	10.1	——	
HV8M4	14	67	36	98	17	——	——	3/4-16UNF	
HV8M4T	14	67	36	130	10	36	12.8	——	
HV10M4	15	77	45	103	18	——	——	3/4-16UNF	
HV10M4T	15	77	45	138	10	36	12.8	——	
HV10M5	15	77	45	112	20	——	——	7/8-14UNF	
HV10M5T	15	77	45	156	14	42	16.1	——	
HV15M5	18	88	52	133	19.5	——	——	7/8-14UNF	
HV15M5T	18	88	52	165	14	43	16.1	——	
HV15M6	18	88	52	133	21	——	——	1-1/16-14UNS	
HV15M6T	18	88	52	172	16	46	19.2	——	
HV20M7T	24	92	66	191	17	49	22.3	——	
HV25M9T	26.5	96	73	246	22	73	28.7	——	

SV型电磁阀 Model SV Solenoid Valve

产品概述 Product Description

- SV型电磁阀是一次开启式或二次开启式电磁阀，适用于单向流动。
- SV型电磁阀用于冷冻、冷藏和空气调节装置的液体、吸气和热气管路上。
- SV型电磁阀的阀座与密封处具有很好的密封性。
- SV型电磁阀可提供多种电压的线圈，而阀体是通用的。
- SV型电磁阀可提供整体供货，也可分体供货，即阀体和线圈分开单独供货。

- Model SV solenoid valve is a once open-type or twice open-type solenoid valve to be suitable to one-way flow.
- Model SV solenoid valve is used on the liquid, air suction and hot vapor pipes of the refrigeration, cold storage and air conditioning facilities.
- Model SV solenoid valve has perfect sealing on its valve seat and sealing part.
- The coil of varies voltages is available for Model SV solenoid valve with a universal valve body.
- Model SV solenoid valve could be supplied in whole or in split, that means the valve body and coil could be supplied separately.

特点 Features

- 线圈为专利产品，整体密封设计；可有效防水，使用寿命长（IP65）。
- 线圈在电压波动大的状况下也能正常工作。
- 多种交直流电磁线圈可供选择。
- 夹卡式电磁线圈拆卸安装方便。
- 可用于冷冻、冷藏和空气调节装置的各种压缩机上。

- The proprietary coil is an entirely sealed design with an effective waterproof performance and a long service life(IP65).
- The solenoidcoil could be operated properly even under unstable voltage.
- Various AC and DC solenoid coils are available for choice.
- Clip type solenoid coil is convenlent in assembly and disassembly.
- It is applicable to various compressors in the refrigertion,cold storage and air conditioning facilities.

技术参数 Technical Parameters

适用制冷剂 Applicable Refrigerants	HCFC、HFC 及相应介质粘度 ≤2° E 润滑机油HCFC、HFC and related medium viscosity ≤2° E lubricant oil
适用介质温度 Applicable Medium Temperature	-30℃~+105℃
线圈的适用环境温度 Application Ambient Temperature of Solenoid	-40℃~+65℃
线圈的标准电压 Standard Voltage of Solenoid	AC380V、220V、110V、24V/50、60Hz、DC12V
线圈的允许电压波动 Allowable Voltage Fluctuation for Solenoid	+10%~-15%
线圈的连接 Connection of Solenoid	3线插入式标准连接器 Standard 3-wire insert connector

选型表 Model Selection

结构Structure	型号Model	接口 Connection		开启压差△P(bar) △P(bar)		最大工作压力(bar) Max Operating Pressure(bar)	Kv值(m³/h)
		规格Spec	型式Type	最小Minimum	最大工作压力差MOPD 液体 LiquidMOP		
直接开启式 Direct Operated	SV20-2	1/4	螺口 SAE	0.0	31（常闭 close） 21（常开 open）	45	0.2
	SV28-2		焊口 ODF				
	SV20-3	3/8	螺口 SAE				0.27
	SV28-3		焊口 ODF				
膜片二次开启式 Servo-Operated	SV64-3		螺口 SAE	0.05			0.8
	SV68-3		焊口 ODF				
	SV64-4	1/2	螺口 SAE				
	SV68-4		焊口 ODF				
	SV70-5	5/8	螺口 SAE				2.6
	SV78-5		焊口 ODF				
	SV70-6	3/4	螺口 SAE				
	SV78-6		焊口 ODF				
	SV98-7	7/8	焊口 ODF	0.2			5.7

1）Kv值：密度为1吨/m³的水在通过电磁阀的压差等于100KPa时的流量，单位为m³/h；

2）气态介质的MOPD约高1bar.

1) Kv value: When the pressure differential is 100 KPa, the flowrate at m³h of water in density 1 t/m³ flows the solenoid valve.

2) The MOPD of gaseous medium is about 1 bar higher than that of liquid.

型号Model	名义制冷量 KWNominal Refrigerating Capacity kW											
	液体 Liquid				吸气 Air Suction				热蒸汽 Hot Vapor			
	R22/R407C	R134a	R404A/R507	R410A	R22/R407C	R134a	R404A/R507	R410A	R22/R407C	R134a	R404A/R507	R410A
SV20	4.03	3.70	2.80	4.02	0.45	0.33	0.40	0.58	1.85	1.48	1.50	2.80
SV64	16.10	14.80	11.20	16.08	1.80	1.30	1.60	2.32	7.40	5.90	6.00	11.18
SV70	52.33	48.10	36.40	52.26	5.85	4.23	5.20	7.54	24.05	19.18	19.50	36.34
SV98	114.71	105.45	79.80	114.57	12.83	9.26	11.40	16.53	52.73	42.04	42.75	79.66

液体和吸气名义制冷量的工况条件为：

- 蒸发温度 te=+40°C
- 阀前液体温度 t1=+25°C
- 经过电磁阀的压力降 ΔP=15KPa

热气名义制冷量的工况条件为：

- 冷凝温度 tc=+40°C
- 经过电磁阀的压力降 ΔP=80KPa
- 热气温度 th=+65°C
- 液体制冷剂过冷度 Δt_{sub}=4K

The working condition the nominal refrigerating capacity of liquid and air suction is as follows:

- Evaporation Temperature: te = -10℃;
- Liquid Temperature before Valve: t1 = +25℃;
- Pressure Drop after Solenoid Valve: △P = 15KPa

The working condition the nominal refrigerating capacity of hot vapor is as follows:

- Condensation Temperature: tc = +40℃;
- Pressure Drop after Solenoid Valve: △P = 80KPa;
- Hot Vapor Temperature: th = +65℃;
- Liquid Refrigerant Overcooding: Δt_{sub}= 4K

结构 Structure

型号Model	外形尺寸 Overall Dimension						重量(g)Weight(g)
	A	H	L	L1	ΦD	M	
SV20-2	70	65	58	——	——	7/16-20UNF	395
SV28-2	70	65	90	7	6.5	——	395
SV20-3	70	65	64	——	——	5/8-18UNF	450
SV28-3	70	65	104	8	10.1	——	450
SV64-3	70	72	87	——	——	5/8-18UNF	496
SV68-3	70	72	108	8	10.1	——	496
SV64-4	70	72	89	——	——	3/4-16UNF	503
SV68-4	70	72	114	10	12.8	——	458
SV70-5	70	75	104	——	——	7/8-14UNF	746
SV78-5	70	75	152	14	16.1	——	598
SV70-6	70	75	104	——	——	1-1/16-14UNS	816
SV78-6	70	75	158	16	19.2	——	616
SV98-7	70	88	180	17	22.3	——	1020

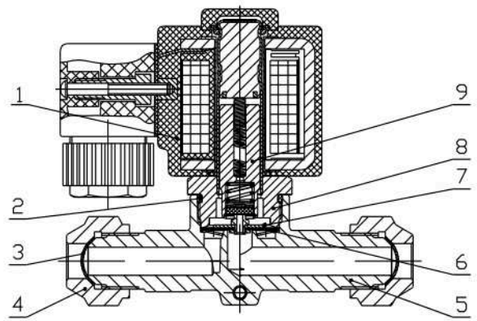

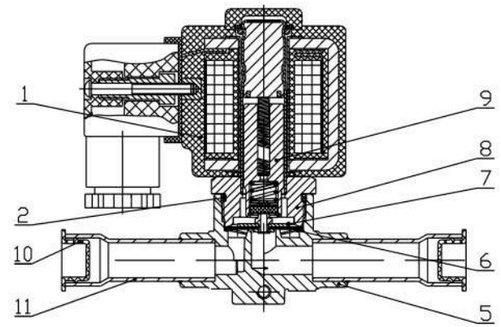

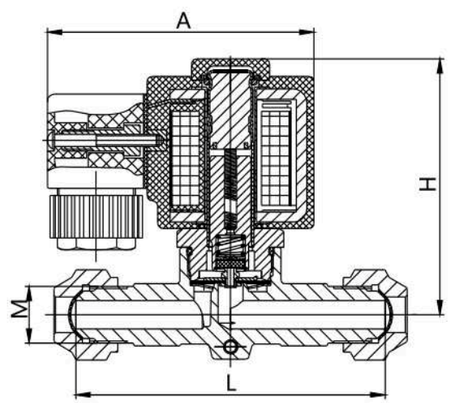

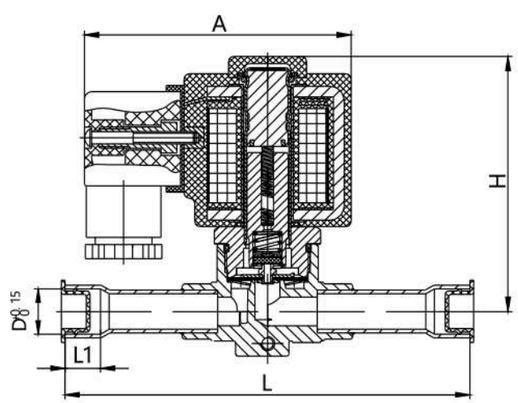

1.电磁线圈 solenoid coi　2.O形圈 O-Ring　3.封帽 sealing cap　4.纳子 nut　5.阀体 valve body

6.挡片 plate　7.阀芯部件 valve element　8.阀座部件 valve seat　9.芯铁部件 core cap　10.防尘帽 dust cap　11.接管 pipe

HV型卸载电磁阀
Model HV Unloading Solenoid Valve

产品概述 Product Description

- HV型卸载电磁阀是一次开启式电磁阀，适用于单向流动。
- HV型卸载电磁阀用于冷冻、冷藏和空气调节装置的压缩机上，
- 根据热负荷的减少情况进行自动卸载，从而使压缩机节能，并延长使用寿命。
- HV型卸载电磁阀的阀座与密封处具有很好的密封性。
- HV型卸载电磁阀可提供整体供货，也可分体供货，即阀体和线圈分开单独供货。

- Model HV unloading solenoid valve is a direct-operated valve, which is applicable to one direction flow.
- Model HV unloading solenoid valve is used on the compressor of the freezer, could store and air conditioning unit. It will automatically unload in accordance with the decrease of heat so that it could save the compressor energy and extend the service life of compressor.
- The valve seat of Model HV unloading solenoid valve is well sealed with perfect sealing performance.
- Both packed and separated Model HV unlading solenoid calves are available and it means the valve body could supplied separately from the solenoid.

特点 Features

- 可提供常闭（NC）型阀。
- 设计耐温可达110℃。
- 10W的大功率电磁线圈，最大工作压差（MOPD）可达3.0MPa。
- 夹卡式电磁线圈可不借助任何工具安装，只需一把螺丝刀就可简单地拆卸。
- 可用于冷冻、冷藏和空气调节装置的各种压缩机。
- 使用寿命长的密封线圈，可在恶劣环境条件下使用。

- Only NC type solenoid valve is available.
- The max. design temperature is 110℃.
- 10W high power solenoid and max. operating pressure differential (MOPD) is 3.0 MPa.
- It is applicable to various compressors in freezer,cold store and air conditioning unit.
- The clamped joint solenoid is easy to be mounted or dismounted only with one screwdriver.
- The sealed solenoid has a long service life and it can be used even in an adverse circumstance.

技术参数 Technical Parameters

适用制冷剂 Applicable Refrigerants	HCFC、HFC 及相应介质粘度 ≤2° E 润滑机油HCFC、HFC and related medium viscosity ≤2° E lubricant oil
适用介质温度 Applicable Medium Temperature	-30℃~+105℃
线圈的适用环境温度 Application Ambient Temperature of Solenoid	-40℃~+65℃
线圈的标准电压 Standard Voltage of Solenoid	AC220V/50HZ
线圈的允许电压波动 Allowable Voltage Fluctuation for Solenoid	+10%~-15%
线圈的连接 Connection of Solenoid	Ip67附带接线盒 Ip67 with terminal box

选型表 Model Selection

型号Model	接口 Connection		开启压差 ΔP(bar) Pressure Differential to Open Valve		最大工作压力(bar) Max.Operating Pressure	Kv值 Kv(m³/h)	重量(g) Weight(g)
	进口端 Inlet	出口端 Outlet	最小 Min	最大工作压力差 (MOPD)			
HV3.2B	法兰连接 Flanged Connectio		0.0	31			
HV2P	3/8 ODF	3/8 SAE	0.0	31			

注：Kv值：密度为1吨/m³的水在通过电磁阀的等于100KPa时的流量，单位为m³/h；
Note: Kv: The flow rate (m³/h) of water of density 1 t/m³ passing through the solenoid valve under the pressure differential of 100 KPa.

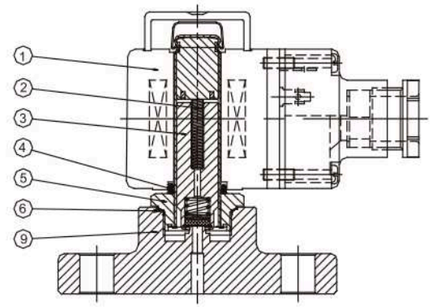

HV3.2B型

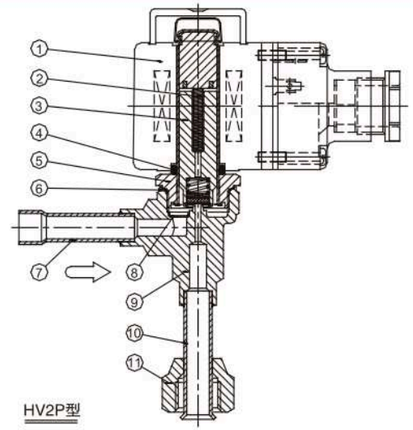

HV2P型

1.电磁线圈（10W） solenoid(10W)
2.回复弹簧 return spring
3.芯铁部件（改性PTFE密封、进口不锈钢磁钢） iron core(modified PTFE sealing and imported stainless magnet steel)
4. O-Ring
5.阀座部件 valve seat
6.密封环 sealing
7.进口接管 suction tube
8.过滤网 filter
9.阀体 valve body
10.出口接管 outlet tube
11.接管螺母 tube nut

外形尺寸 Overall Dimension

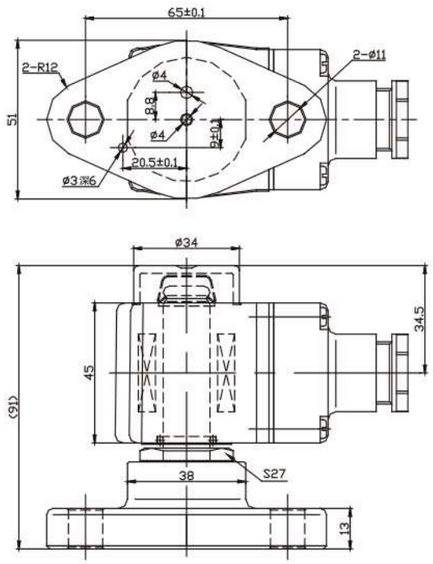

HV3.2B型

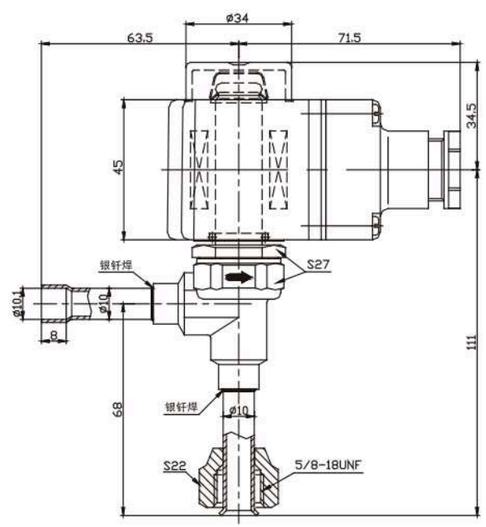

HV2P型

热力膨胀阀系列

THERMOSTATIC EXPANSION VALVE *Series*

采用进口膜片，线性更稳定
采用独特的充注技术，库内库外均可使用

Using imported diaphragm, linearity is more stable.
With unique charging technology, can be used in/outside of the cold room.

TH THW 型热力膨胀阀 Thermostatic Expansion Valve

TH型
Model TH

阀芯
Orifice

THW型
Model THW

产品概述 Product Description

- T型膨胀阀是一种可换芯的新型热力膨胀阀
- T型膨胀阀用于调节蒸发器中液体制冷剂的供给量
- T型膨胀阀特别适合于干式蒸发器中制冷剂液体的供给
- T型膨胀阀是通过制冷剂的过热度调节来进行自动控制的

- T-type expansion valve is a novel thermostatic expansion value with replaceable valve element
- T-type expansion valve is used for adjusting the supply quantity of liquid refrigerant in evaporator
- T-type expansion valve is particularly suitable for supplying liquid refrigerant in dry-type evaporator
- T-type expansion valve has autocontrol through regulating the-superheating degree of refrigerant.

特点 Features

- 蒸发温度范围大
- 可提供MOP功能，可使压缩机电机不会因过高的蒸发压力而损伤。
- 具有内外平衡两种形式，能有效的消除蒸发器压力损失带来的影响。
- 具有发明专利的膜片结构，大大改善了低温下的工作性能。
- 阀帽采用二次密封结构，有效降低外泄漏概率。
- 带过滤功能的可换阀芯组件，便于库存、匹配和维修。
- 温包采用混合充注技术，使整个蒸发温度范围内都具有等过热度特性。

- Large scope of evaporating temperature.
- be capable of providing MOP function so as not to damage the compressor motor due to overhigh evaporating pressure.
- Have two forms of internal and external equaliser, be capable of removing influence brought by loss of evaporator pressure effectively.
- Have the membrane structure with invention patent, greatly improve the working performance at low temperature.
- The bonnet adopts a secondary sealing structure to reduce the percentage of external leakage .
- With filting orifice,convenient storage, matching and maintenance
- The temperature wrap has mixed charging technology so as to have the feature of superheating degree within the whole evaporating temperature range

技术参数 Technical Parameters

适用制冷剂 Applicable Refrigerants	R22/R407C、R134a、R404A冷媒等介质
适用介质温度 Applicable Medium	R22/R407C: -40℃~+10℃; R134a:-30℃~+10℃;R404A:-40℃~+10℃
名义容量 Norminal Capacity	2.5KW~15.5KW、1.8KW~10.5KW、1.6KW~9.1KW
过热度调节范围 Adjustable Range of Superheat	2℃~8℃
出厂静热度调定值 Ex-Works Static Heat Adjustment	3.5℃
最大工作压力 Maximum Working Pressure	2.8MPa
最大测试压力 Maximum Testing Pressure	3.2MPa

- T型热力膨胀阀毛细管长度：标准1.5m，特殊情况可按用户要求。
- Capillary length of T-type thermostatic expansion valve:1.5m in atandard; under special situation,it can be customized based on clients' requirements.

选型表 Model Selection

制冷剂 Refrigerant	型号 Model	阀芯 Spool	冷凝温度 (℃) Condensing Temp	制冷量(KW)/(TR) 蒸发温度(℃) Evaporation temperature -40	-35	-30	-25	-20	-15	-10	-5	0	5	10
R22/R407C	TH22/TH22W	1#	25	1.3/0.37	1.48/0.42	1.69/0.48	1.91/0.55	2.14/0.61	2.36/0.67	2.58/0.74	2.75/0.79	2.86/0.82	2.86/0.82	2.72/0.78
		2#		1.46/0.42	1.69/0.48	1.94/0.55	2.22/0.63	2.52/0.72	2.85/0.81	3.18/0.91	3.49/1	3.75/1.07	3.88/1.11	3.81/1.09
		3#		2.44/0.7	2.83/0.81	3.26/0.93	3.73/1.07	4.24/1.21	4.78/1.37	5.33/1.52	5.85/1.67	6.29/1.8	6.53/1.87	6.46/1.85
		4#		3.52/1.01	4.07/1.16	4.7/1.34	5.42/1.55	6.24/1.78	7.11/2.03	8.02/2.29	8.87/2.53	9.55/2.73	9.88/2.82	9.71/2.77
		5#		4.6/1.31	5.31/1.52	6.14/1.75	7.08/2.02	8.15/2.33	9.34/2.67	10.62/3.03	11.86/3.39	12.91/3.69	13.48/3.85	13.29/3.8
		6#		5.43/1.55	6.26/1.79	7.22/2.06	8.32/2.38	9.56/2.73	10.95/3.13	12.43/3.55	13.91/3.97	15.18/4.34	15.91/4.55	15.71/4.49
	TH22/TH22W	1#	35	1.34/0.38	1.54/0.44	1.76/0.5	2/0.57	2.26/0.65	2.53/0.72	2.8/0.8	3.06/0.87	3.27/0.93	3.4/0.97	3.43/0.98
		2#		1.52/0.43	1.76/0.5	2.03/0.58	2.34/0.67	2.68/0.77	3.06/0.87	3.46/0.99	3.88/1.11	4.29/1.23	4.63/1.32	4.83/1.38
		3#		2.56/0.73	2.97/0.85	3.44/0.98	3.95/1.13	4.52/1.29	5.16/1.47	5.84/1.67	6.55/1.87	7.24/2.07	7.83/2.24	8.2/2.34
		4#		3.77/1.08	4.34/1.24	5.02/1.43	5.8/1.66	6.69/1.91	7.7/2.2	8.8/2.51	9.94/2.84	11.03/3.15	11.92/3.41	12.45/3.56
		5#		4.92/1.41	5.67/1.62	6.54/1.87	7.57/2.16	8.76/2.5	10.13/2.89	11.68/3.34	13.35/3.81	15/4.29	16.4/4.69	17.19/4.91
		6#		5.77/1.65	6.65/1.9	7.66/2.19	8.85/2.53	10.23/2.92	11.82/3.38	13.62/3.89	15.59/4.45	17.57/5.02	19.3/5.51	20.32/5.81
	TH22/TH22W	1#	45	1.37/0.39	1.58/0.45	1.81/0.52	2.06/0.59	2.33/0.67	2.63/0.75	2.93/0.84	3.24/0.93	3.51/1	3.74/1.07	3.87/1.11
		2#		1.56/0.45	1.81/0.52	2.09/0.6	2.41/0.69	2.77/0.79	3.18/0.91	3.64/1.04	4.13/1.18	4.63/1.32	5.11/1.46	5.48/1.57
		3#		2.64/0.75	3.07/0.88	3.55/1.01	4.09/1.17	4.71/1.35	5.41/1.55	6.18/1.77	7.03/2.01	7.91/2.26	8.75/2.5	9.42/2.69
		4#		3.96/1.13	4.55/1.3	5.24/1.5	6.05/1.73	6.98/1.99	8.05/2.3	9.26/2.65	10.56/3.02	11.9/3.4	13.15/3.76	14.17/4.05
		5#		5.17/1.48	5.94/1.7	6.84/1.95	7.91/2.26	9.16/2.62	10.64/3.04	12.53/3.58	14.28/4.08	16.35/4.67	18.32/5.23	19.87/5.68
		6#		6.04/1.73	6.94/1.98	7.99/2.28	9.22/2.63	10.68/3.05	12.39/3.54	14.38/4.11	16.65/4.76	19.13/5.47	21.57/6.16	23.55/6.73
	TH22/TH22W	1#	55	1.38/0.39	1.59/0.45	1.82/0.52	2.07/0.59	2.35/0.67	2.66/0.76	2.98/0.85	3.3/0.94	3.61/1.03	3.88/1.11	4.08/1.17
		2#		1.58/0.45	1.83/0.52	2.12/0.61	2.44/0.7	2.81/0.8	3.24/0.93	3.71/1.06	4.24/1.21	4.79/1.37	5.34/1.53	5.81/1.66
		3#		2.68/0.77	3.11/0.89	3.6/1.03	4.16/1.19	4.8/1.37	5.52/1.58	6.34/1.81	7.26/2.07	8.25/2.36	9.24/2.64	10.09/2.88
		4#		4.11/1.17	4.66/1.33	5.38/1.54	6.19/1.77	7.13/2.04	8.21/2.35	9.43/2.69	10.79/3.08	12.23/3.49	13.65/3.9	14.93/4.27
		5#		5.36/1.53	6.14/1.75	7.05/2.01	8.12/2.32	9.38/2.68	10.89/3.11	12.65/3.61	14.67/4.19	16.9/4.83	19.17/5.48	21.13/6.04
		6#		6.24/1.78	7.14/2.04	8.2/2.34	9.44/2.7	10.92/3.12	12.66/3.62	14.73/4.21	17.13/4.89	19.83/5.67	22.64/6.47	25.16/7.19
R134a	TH134/TH134w	1#	25	0.71/0.20	0.81/0.23	0.93/0.27	1.09/0.31	1.21/0.35	1.29/0.37	1.52/0.43	1.59/0.45	1.68/0.48	1.83/0.52	1.82/0.52
		2#		0.79/0.23	0.89/0.25	1.02/0.29	1.19/0.34	1.43/0.41	1.52/0.43	1.72/0.49	1.92/0.55	2.12/0.61	2.21/0.63	2.19/0.63
		3#		1.31/0.37	1.53/0.44	1.69/0.48	2.02/0.58	2.31/0.66	2.63/0.75	2.91/0.83	3.18/0.91	3.49/1.00	3.7/1.06	3.84/1.10
		4#		1.88/0.54	2.21/0.63	2.52/0.72	2.91/0.83	3.31/0.95	3.69/1.05	4.19/1.20	4.69/1.34	5.58/1.59	5.56/1.59	5.73/1.64
		5#		2.52/0.72	2.93/0.84	3.29/0.94	3.79/1.08	4.35/1.24	4.91/1.40	5.63/1.61	6.15/1.76	6.83/1.95	7.33/2.09	7.51/2.15
		6#		2.99/0.85	3.38/0.97	3.91/1.12	4.51/1.29	5.23/1.49	5.88/1.68	6.72/1.92	7.56/2.16	8.25/2.36	8.76/2.50	8.99/2.57
	TH134/TH134w	1#	35	0.71/0.20	0.82/0.23	0.98/0.28	1.12/0.32	1.16/0.33	1.39/0.40	1.30/0.37	1.80/0.51	2.02/0.58	2.02/0.58	2.13/0.61
		2#		0.82/0.23	0.93/0.27	1.12/0.32	1.19/0.34	1.42/0.41	1.58/0.45	1.89/0.54	2.12/0.61	2.39/0.68	2.53/0.72	2.81/0.80
		3#		1.39/0.40	1.62/0.46	1.82/0.52	2.13/0.61	2.37/0.68	2.83/0.81	3.09/0.88	3.45/0.99	4.01/1.15	4.51/1.29	4.75/1.36
		4#		2.02/0.58	2.33/0.67	2.63/0.75	3.01/0.86	3.53/1.01	3.99/1.14	4.59/1.31	5.18/1.48	5.95/1.70	6.58/1.88	7.22/2.06
		5#		2.73/0.78	3.01/0.86	3.52/1.01	4.02/1.15	4.62/1.32	5.33/1.52	6.08/1.74	6.91/1.97	7.76/2.22	8.69/2.48	9.41/2.69
		6#		3.18/0.91	3.62/1.03	4.11/1.17	4.85/1.39	5.53/1.58	6.28/1.79	7.22/2.06	8.24/2.35	9.26/2.65	10.31/2.95	11.25/3.21
	TH134/TH134w	1#	45	0.77/0.22	0.83/0.24	0.96/0.27	1.08/0.31	1.34/0.38	1.46/0.42	1.73/0.49	1.92/0.55	2.11/0.60	2.25/0.64	2.53/0.72
		2#		0.81/0.23	0.92/0.26	1.12/0.32	1.33/0.38	1.52/0.43	1.69/0.48	1.92/0.55	2.23/0.64	2.53/0.72	2.85/0.81	3.16/0.90
		3#		1.42/0.41	1.66/0.47	1.83/0.52	2.16/0.62	2.49/0.71	2.75/0.79	3.34/0.95	3.71/1.06	4.23/1.21	4.69/1.34	5.32/1.52
		4#		2.11/0.60	2.42/0.69	2.68/0.77	3.21/0.92	3.58/1.02	4.26/1.22	4.76/1.36	5.61/1.60	6.31/1.80	7.12/2.03	7.85/2.24
		5#		2.83/0.81	3.15/0.90	3.66/1.05	4.15/1.19	4.86/1.39	5.55/1.59	6.25/1.79	7.28/2.08	8.15/2.33	9.25/2.64	10.29/2.94
		6#		3.36/0.96	3.72/1.06	4.31/1.23	4.94/1.41	5.62/1.61	6.52/1.86	7.46/2.13	8.63/2.47	9.91/2.83	11.2/3.20	12.44/3.55

选型表 Model Selection

制冷剂 Refrigerant	型号 Model	阀芯 Spool	冷凝温度 (℃) Condensing Temp	制冷量(KW)/(TR) 蒸发温度(℃) Evaporation temperature										
				-40	-35	-30	-25	-20	-15	-10	-5	0	5	10
R134a	TH134/ TH134w	1#	55	0.75/0.21	0.82/0.23	0.96/0.27	1.13/0.32	1.32/0.38	1.56/0.45	1.75/0.50	1.93/0.55	2.14/0.61	2.33/0.67	2.54/0.73
		2#		0.83/0.24	0.95/0.27	1.12/0.32	1.28/0.37	1.49/0.43	1.78/0.51	1.89/0.54	2.15/0.61	2.53/0.72	2.75/0.79	3.18/0.91
		3#		1.44/0.41	1.62/0.46	1.82/0.52	2.06/0.59	2.38/0.68	2.69/0.77	3.41/0.97	3.74/1.07	4.26/1.22	4.63/1.32	5.26/1.50
		4#		2.11/0.60	2.42/0.69	2.83/0.81	3.25/0.93	3.65/1.04	4.26/1.22	4.76/1.36	5.53/1.58	6.21/1.77	7.08/2.02	7.93/2.27
		5#		2.86/0.82	3.21/0.92	3.56/1.02	4.23/1.21	4.91/1.40	5.52/1.58	6.33/1.81	7.23/2.07	8.21/2.35	9.4/2.69	10.3/2.94
		6#		3.29/0.94	3.74/1.07	4.29/1.23	4.92/1.41	5.82/1.66	6.43/1.84	7.52/2.15	8.66/2.47	9.85/2.81	11.2/3.20	12.35/3.53
R404A	TH404/ TH404W	1#	25	0.99/0.28	1.18/0.34	1.39/0.4	1.65/0.47	1.83/0.52	1.93/0.55	2.13/0.61	2.23/0.64	2.41/0.69	2.43/0.69	2.36/0.67
		2#		1.12/0.32	1.34/0.38	1.56/0.45	1.93/0.55	2.21/0.63	2.52/0.72	2.85/0.81	3.02/0.86	3.32/0.95	3.19/0.91	3.15/0.9
		3#		1.13/0.32	2.22/0.63	2.67/0.76	3.12/0.89	3.71/1.06	4.15/1.19	4.65/1.33	5.31/1.52	5.53/1.58	5.5/1.57	5.36/1.53
		4#		2.73/0.78	3.21/0.92	3.83/1.09	4.62/1.32	5.44/1.55	6.13/1.75	7.21/2.06	7.82/2.23	8.52/2.43	8.72/2.49	8.59/2.45
		5#		3.52/1.01	4.23/1.21	5.03/1.44	6.03/1.72	7.21/2.06	8.26/2.36	9.35/2.67	10.34/2.95	11.23/3.21	11.43/3.27	11.17/3.19
		6#		4.23/1.21	5.02/1.43	6.11/1.75	7.12/2.03	8.36/2.39	9.85/2.81	11.13/3.18	12.56/3.59	13.41/3.83	13.8/3.94	13.25/3.79
	TH404/ TH404W	1#	35	0.93/0.27	1.16/0.33	1.25/0.36	1.63/0.47	1.82/0.52	1.98/0.57	2.35/0.67	2.39/0.68	2.65/0.76	2.77/0.79	2.68/0.77
		2#		1.21/0.35	1.25/0.36	1.53/0.44	1.82/0.52	2.13/0.61	2.61/0.75	2.91/0.83	3.41/0.97	3.49/1	3.65/1.04	3.95/1.13
		3#		1.69/0.48	2.11/0.6	2.67/0.76	3.15/0.9	3.65/1.04	4.29/1.23	4.92/1.41	5.63/1.61	6.03/1.72	6.62/1.89	6.63/1.89
		4#		2.54/0.73	3.06/0.87	3.85/1.1	4.61/1.32	5.51/1.57	6.51/1.86	7.46/2.13	8.62/2.46	9.38/2.68	10.31/2.95	10.62/3.03
		5#		3.46/0.99	3.99/1.14	4.91/1.4	5.81/1.66	7.12/2.03	8.2/2.34	9.75/2.79	11.21/3.2	12.53/3.58	13.52/3.86	13.59/3.88
		6#		4.12/1.18	4.76/1.36	5.86/1.67	7.1/2.03	8.33/2.38	10.1/2.89	11.8/3.37	13.52/3.86	14.92/4.26	16.03/4.58	16.25/4.64
	TH404/ TH404W	1#	45	0.88/0.25	0.98/0.28	1.16/0.33	1.46/0.42	1.72/0.49	1.79/0.51	2.25/0.64	2.51/0.72	2.61/0.75	2.72/0.78	2.93/0.84
		2#		0.96/0.27	1.22/0.35	1.42/0.41	1.75/0.5	2.03/0.58	2.45/0.7	2.71/0.77	3.22/0.92	3.53/1.01	3.95/1.13	4.22/1.21
		3#		1.55/0.44	2.05/0.59	2.51/0.72	2.93/0.84	3.51/1	4.23/1.21	4.92/1.41	5.61/1.6	6.13/1.75	6.68/1.91	7.15/2.04
		4#		2.36/0.67	2.92/0.83	3.66/1.05	4.21/1.2	5.23/1.49	6.21/1.77	7.35/2.1	8.38/2.39	9.65/2.76	10.92/3.12	11.29/3.23
		5#		3.25/0.93	3.82/1.09	4.53/1.29	5.49/1.57	6.6/1.89	8.1/2.31	9.49/2.71	11.1/3.17	13.1/3.74	14.25/4.07	15.02/4.29
		6#		3.78/1.08	4.56/1.3	5.51/1.57	6.63/1.89	7.85/2.24	9.7/2.77	11.52/3.29	13.6/3.89	15.33/4.38	16.8/4.8	17.85/5.1
	TH404/ TH404W	1#	55	0.73/0.21	0.86/0.25	1.15/0.33	1.32/0.38	1.51/0.43	1.75/0.5	2.06/0.59	2.16/0.62	2.5/0.71	2.53/0.72	2.76/0.79
		2#		0.86/0.25	0.98/0.28	1.23/0.35	1.49/0.43	1.82/0.52	2.1/0.6	2.43/0.69	2.99/0.85	3.23/0.92	3.75/1.07	4.03/1.15
		3#		1.35/0.39	1.69/0.48	2.21/0.63	2.53/0.72	3.01/0.86	3.63/1.04	4.36/1.25	5.03/1.44	5.76/1.65	6.31/1.8	6.85/1.96
		4#		2.23/0.64	2.65/0.76	3.12/0.89	3.69/1.05	4.52/1.29	5.51/1.57	6.55/1.87	7.61/2.17	9.1/2.6	10.01/2.86	10.92/3.12
		5#		2.91/0.83	3.43/0.98	4.06/1.16	4.85/1.39	5.93/1.69	7.25/2.07	8.69/2.48	10.41/2.97	11.75/3.36	13.6/3.89	14.3/4.09
		6#		3.29/0.94	4.01/1.15	4.75/1.36	5.82/1.66	7.11/2.03	8.39/2.4	10.38/2.97	12.26/3.5	14.4/4.11	16.2/4.63	17.35/4.96
R410A	TH410/TH 410W	1#	25	1.03/0.29	1.33/0.38	1.68/0.48	1.96/0.56	2.35/0.67	2.69/0.77	3.1/0.89	3.29/0.94	3.81/1.09	3.65/1.04	3.29/0.94
		2#		1.32/0.38	1.68/0.48	2.05/0.59	2.45/0.7	2.86/0.82	3.25/0.93	3.65/1.04	4.24/1.21	4.62/1.32	4.29/1.23	4.28/1.22
		3#		2.35/0.67	3.03/0.87	3.62/1.03	4.39/1.25	5.19/1.48	5.93/1.69	9.62/2.75	7.53/2.15	8.35/2.39	7.86/2.25	7.63/2.18
		4#		3.49/1	4.5/1.29	5.51/1.57	6.51/1.86	7.95/2.27	8.79/2.51	9.99/2.85	11.35/3.24	12.54/3.58	12.03/3.44	11.53/3.29
		5#		4.36/1.25	5.56/1.59	6.79/1.94	8.31/2.37	9.68/2.77	11.25/3.21	12.58/3.59	14.23/4.07	16.73/4.78	14.98/4.28	14.4/4.11
		6#		5.39/1.54	6.93/1.98	8.55/2.44	10.32/2.95	12.1/3.46	19.88/5.68	15.92/4.55	17.68/5.05	19.58/5.59	18.78/5.37	17.9/5.11
	TH410/TH 410W	1#	35	1.1/0.31	1.43/0.41	1.68/0.48	2.01/0.57	2.39/0.68	2.91/0.83	3.21/0.92	3.72/1.06	4.21/1.2	4.15/1.19	4.08/1.17
		2#		1.32/0.38	1.69/0.48	2.12/0.61	2.5/0.71	2.96/0.85	3.52/1.01	3.96/1.13	4.56/1.3	5.15/1.47	5.1/1.46	5.06/1.45
		3#		2.25/0.64	3.12/0.89	3.68/1.05	4.51/1.29	5.36/1.53	6.31/1.8	7.2/2.06	8.15/2.33	9.22/2.63	9.08/2.59	9.08/2.59
		4#		3.39/0.97	4.39/1.25	5.62/1.61	6.67/1.91	8.01/2.29	9.42/2.69	10.81/3.09	13.38/3.82	14.01/4	13.91/3.97	13.88/3.97
		5#		4.39/1.25	5.68/1.62	7.03/2.01	8.46/2.42	10.1/2.89	11.68/3.34	13.4/3.83	15.51/4.43	17.2/4.91	17.25/4.93	17.42/4.98
		6#		5.61/1.6	7.05/2.01	8.82/2.52	10.59/3.03	15.61/4.46	14.69/4.2	16.65/4.76	19.43/5.55	21.75/6.21	21.77/6.22	21.69/6.2

选型表 Model Selection

制冷剂 Refrigerant	型号 Model	阀芯 Spool	冷凝温度 (℃) Condensing Temp	制冷量(KW)/(TR) 蒸发温度(℃) Evaporation temperature										
				-40	-35	-30	-25	-20	-15	-10	-5	0	5	10
R410A	TH410/T H410W	1#	45	1.06/0.3	1.38/0.39	1.59/0.45	2.01/0.57	2.39/0.68	2.86/0.82	3.19/0.91	3.82/1.09	4.28/1.22	4.3/1.23	4.41/1.26
		2#		1.33/0.38	1.66/0.47	2.06/0.59	2.39/0.68	3.01/0.86	3.51/1	4.06/1.16	4.71/1.35	5.29/1.51	5.29/1.51	5.46/1.56
		3#		2.29/0.65	2.96/0.85	3.68/1.05	4.48/1.28	5.4/1.54	6.28/1.79	7.31/2.09	8.44/2.41	9.63/2.75	9.68/2.77	9.85/2.81
		4#		3.35/0.96	4.38/1.25	5.39/1.54	6.65/1.9	7.89/2.25	9.42/2.69	10.9/3.11	12.58/3.59	14.55/4.16	14.69/4.2	15.02/4.29
		5#		4.36/1.25	5.58/1.59	6.93/1.98	8.61/2.46	10.1/2.89	11.85/3.39	13.68/3.91	15.99/4.57	18.25/5.21	15.65/4.47	18.91/5.4
		6#		5.44/1.55	6.92/1.98	8.65/2.47	10.49/3	12.56/3.59	14.9/4.26	17.22/4.92	20.01/5.72	22.69/6.48	23.3/6.66	23.75/6.79
	TH410/T H410W	1#	55	0.96/0.27	1.31/0.37	1.62/0.46	1.95/0.56	2.26/0.65	2.75/0.79	3.15/0.9	3.69/1.05	4.31/1.23	4.28/1.22	4.42/1.26
		2#		1.23/0.35	1.62/0.46	1.88/0.54	2.38/0.68	2.85/0.81	3.29/0.94	3.86/1.1	4.56/1.3	5.2/1.49	5.41/1.55	5.61/1.6
		3#		2.15/0.61	2.79/0.8	3.43/0.98	4.31/1.23	5.06/1.45	6.02/1.72	7.08/2.02	8.15/2.33	9.5/2.71	9.63/2.75	10.1/2.89
		4#		3.15/0.9	4.21/1.2	5.12/1.46	6.29/1.8	7.53/2.15	9.01/2.57	10.4/2.97	12.36/3.53	14.11/4.03	14.68/4.19	15.2/4.34
		5#		4.03/1.15	5.32/1.52	6.39/1.83	7.96/2.27	9.56/2.73	11.36/3.25	13.25/3.79	15.43/4.41	17.69/5.05	18.33/5.24	18.96/5.42
		6#		5.02/1.43	6.49/1.85	8.01/2.29	9.98/2.85	11.95/3.41	14.31/4.09	16.61/4.75	19.38/5.54	22.19/6.34	23.1/6.6	23.68/6.77

- 膨胀阀按照蒸发器冷量选型
- 如蒸发器有分液头，建议选择外平衡热力膨胀阀
- 注意制冷剂型号，选择对应的热力膨胀阀

- Model of expansion valve should be selected by refrigerating capacity of evaporators.
- External equalisation thermostatic expansion valve should be chosen for evaporators with distributors.
- Pay attention to the refrigerant when choosing expansion valve.

结构 Structure

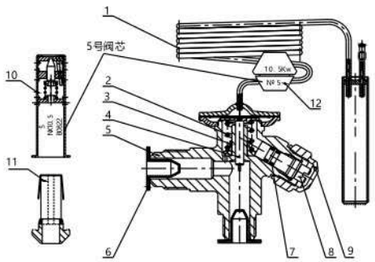

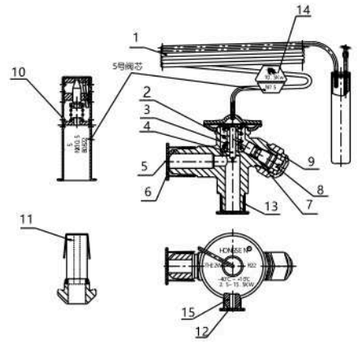

1.气箱头部件；2.调节弹簧；3.弹簧座；4.传动杆组件；5.阀体；6.防尘帽；7.O型圈；
8.调节杆；9阀帽；10.阀芯；11.过滤器组件；12.阀芯盖
1、power element; 2、regulating spring; 3、spring seat; 4、transfer bar component;
5、valve body; 6、dust cap; 7、O-type ring; 8、regulating stem; 9、value bonnet;
10、orifice(No:1#~6#); 11、filting component; 12、orifice packing cover

1.气箱头部件；2.调节弹簧；3.弹簧座；4.传动杆组件；5.阀体；6.防尘帽（4分）；
7.O型圈；8.调节杆；9.阀帽；10.阀芯（1# - 6#）；11.过滤网组件；12.防尘帽（2分）；
13.防尘帽（3分）；14.阀芯盖；15.外平衡接口
1、power element; 2、regulating spring; 3、spring seat; 4、transfer bar component; 5、valve body; 6、dust cap; 7、O-type ring; 8、regulating stem;
9、value bonnet; 10、orifice(No:1#~6#); 11、filting component; 12、dust cap;
13、dust cap;14、orifice packing cover; 15、external equaliser

可换芯选择 Replaceable element model

阀体编号 Valve element No.	名义制冷量 (TR)Nominal refrigerating capacity(TR)				名义制冷量 (KW)Nominal refrigerating capacity(KW)			
	R22/R407C	R134a	R404A	R410A	R22	R134a	R404A	R410A
No.1	0.7	0.5	0.45	0.92	2.5	1.8	1.6	3.25
No.2	1.0	0.8	0.6	1.55	3.5	2.6	2.1	5.45
No.3	1.5	1.3	1.2	2.5	5.2	4.6	4.2	8.7
No.4	2.3	1.9	1.7	4	8.0	6.7	6.0	14.15
No.5	3.0	2.5	2.2	4.9	10.5	8.6	7.7	17.28
No.6	4.5	3.0	2.6	5.7	15.5	10.5	9.1	19.95

主阀体选型 Model of main value body

制冷剂 Refrigerant	型号 Model	压力平衡 Pressure Equalisation	接口螺纹 Thread		
			进口端Intet	出口端Outlet	外平衡口 External Equaliser
R22/R407C	TH22	内平衡 Internal Equalisation	3/8 SAE	1/2 SAE	
R22/R407C	TH22W	外平衡 External Equalisation	3/8 SAE	1/2 SAE	1/4 SAE
R134a	TH134	内平衡 Internal Equalisation	3/8 SAE	1/2 SAE	
R134a	TH134W	外平衡 External Equalisation	3/8 SAE	1/2 SAE	1/4 SAE
R404A	TH404	内平衡 Internal Equalisation	3/8 SAE	1/2 SAE	
R404A	TH404W	外平衡 External Equalisation	3/8 SAE	1/2 SAE	1/4 SAE
R410A	TH410	内平衡 Internal Equalisation	3/8 SAE	1/2 SAE	
R410A	TH410W	外平衡 External Equalisation	3/8 SAE	1/2 SAE	1/4 SAE

• 名义制冷屋的工况条件为：蒸发温度5°C；冷凝温度35°C；过热度3.5°C；过冷度4°C。

• Working Condition of Nominal Refrigerating Capacity: Evaporation Temperature: + 5°C; Condensation Temperature:+35°C; Superheat:3.5°C;Subcooling:4°C.

FRF 型热力膨胀阀
FRF Thermostatic Expansion Valve

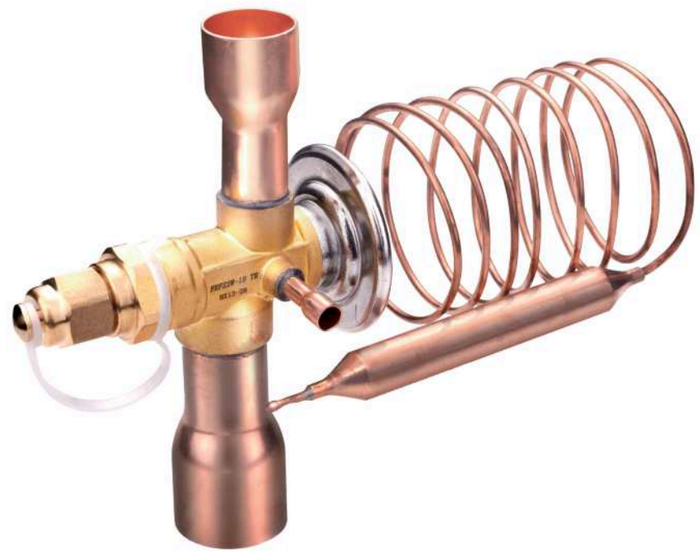

FRF型（英制焊口）
Model FRF（inch ODF）

安装使用要求 Installation and usage requirements

1）焊管式膨胀阀在与系统管子焊接时，必须注意以下几点;
1.1、首先用湿布或湿棉纱包在阀体上保护阀体，以防在焊接时温度过高烧坏阀内零件。
1.2、焊接时请注意焊枪火焰方向为朝阀体外向.
1.3、选用低温银焊条焊接。
2）膨胀阀维修保养应指定专业人员进行。

1) welded pipe expansion valve with the system pipe welding, we must pay attention to the following points;
1.1 、use a damp cloth or a wet cotton bag to protect bodyon the body, To avoid high that temperature burn in the valve parts in welding. Please note that the
1.2、welding torch flame direction toward the body outward. 1.3 low temperature silverelec trode welding.
2) expansion valve maintenance should be designated professional staff.

技术参数 Technical Parameters

适用制冷剂 Applicable Refrigerants	R22、R134a、R404A冷媒等介质
适用介质温度 Applicable Medium	R22: -40℃~+10℃; R134a:-30℃~+10℃;R404A:-40℃~+10℃
过热度调节范围 Adjustable Range of Superheat	2℃~8℃
最大工作压力 Maximum Working Pressure	2.8MPa
最大测试压力 Maximum Testing Pressure	3.2MPa

选型表 Model Selection

制冷剂 Refrigerant	冷凝温度 (℃) Condensing Temp	型号 Model	制冷量(KW)/(TR) 蒸发温度(℃) Evaporation temperature								
			-35	-30	-25	-20	-15	-10	-5	0	5
R22	40	FRF22W-3-3-5	4.99/1.43	5.69/1.63	6.43/1.84	7.2/2.06	7.98/2.28	8.75/2.5	9.49/2.71	10.17/2.91	10.72/3.06
		FRF22W-3-4-5	4.99/1.43	5.69/1.63	6.43/1.84	7.2/2.06	7.98/2.28	8.75/2.5	9.49/2.71	10.17/2.91	10.72/3.06
		FRF22W-4-4-7	6.68/1.91	7.63/2.18	8.63/2.47	9.68/2.77	10.75/3.07	11.81/3.37	12.83/3.67	13.76/3.93	14.52/4.15
		FRF22W-6-4-5	9.69/2.77	11.1/3.17	12.58/3.59	14.12/4.03	15.7/4.49	17.26/4.93	18.77/5.36	20.12/5.75	21.24/6.07
		FRF22W-6-4-7	9.69/2.77	11.1/3.17	12.58/3.59	14.12/4.03	15.7/4.49	17.26/4.93	18.77/5.36	20.12/5.75	21.24/6.07
		FRF22W-7.5-5-7	12.00/3.43	13.86/3.96	15.84/4.53	17.89/5.11	19.97/5.71	21.03/6.01	22.98/6.57	25.72/7.35	27.1/7.74
		FRF22W-11-5-7	19.44/5.55	22.45/6.41	25.58/7.31	28.73/8.21	31.98/9.14	34.6/9.89	37.07/10.59	38.85/11.1	39.95/11.41
		FRF22W-11-5-9	19.44/5.55	22.45/6.41	25.58/7.31	28.73/8.21	31.98/9.14	34.6/9.89	37.07/10.59	38.85/11.1	39.95/11.41
		FRF22W-12-5-7	19.86/5.67	22.01/6.29	25.07/7.16	28.26/8.07	31.51/9	34.25/9.79	37.91/10.83	40.11/11.46	42.61/12.17
		FRF22W-12-5-9	19.86/5.67	22.01/6.29	25.07/7.16	28.26/8.07	31.51/9	34.25/9.79	37.91/10.83	40.11/11.46	42.61/12.17
		FRF22W-15-5-9	22.47/6.42	25.11/7.17	28.3/8.09	31.96/9.13	35.69/10.2	38.86/11.1	41.85/11.96	51.13/14.61	54.25/15.5
		FRF22W-15-7-9	22.47/6.42	25.11/7.17	28.3/8.09	31.96/9.13	35.69/10.2	38.86/11.1	41.85/11.96	51.13/14.61	54.25/15.5
		FRF22W-18-7-9	25.31/7.23	28.72/8.21	33.17/9.48	38.98/11.14	45.08/12.88	49.37/14.11	53.68/15.34	58.76/16.79	63.22/18.06
		FRF22W-18-7-11	25.31/7.23	28.72/8.21	33.17/9.48	38.98/11.14	45.08/12.88	49.37/14.11	53.68/15.34	58.76/16.79	63.22/18.06
		FRF22W-26-7-11	36.48/10.42	42.31/12.09	48.76/13.93	55.84/15.95	63.49/18.14	71.61/20.46	79.99/22.85	88.29/25.23	92.02/26.29
		FRF22W-26-9-11	36.48/10.42	42.31/12.09	48.76/13.93	55.84/15.95	63.49/18.14	71.61/20.46	79.99/22.85	88.29/25.23	92.02/26.29
		FRF22W-30-7-11	41.30/11.80	47.93/13.69	55.26/15.79	63.29/18.08	71.98/20.57	81.2/23.2	90.69/25.91	100.1/28.6	104.8/29.94
		FRF22W-30-9-11	41.30/11.80	47.93/13.69	55.26/15.79	63.29/18.08	71.98/20.57	81.2/23.2	90.69/25.91	100.1/28.6	104.8/29.94
		FRF22W-38-9-11	48.63/13.89	55.75/15.93	64.95/18.56	75.29/21.51	86.78/24.79	99.3/28.37	111.5/31.86	123.7/35.34	134.7/38.49
R404A	40	FRF404W-4-4-5	4.1/1.17	4.71/1.35	5.38/1.54	6.09/1.74	6.84/1.95	7.62/2.18	8.39/2.4	9.11/2.6	9.73/2.78
		FRF404W-5-5-7	5.1/1.46	5.71/1.63	6.48/1.85	7.59/2.17	8.84/2.53	9.52/2.72	10.39/2.97	11.36/3.25	12.28/3.51
		FRF404W-7.5-5-7	7.55/2.16	8.71/2.49	10.1/2.89	11/3.14	12.94/3.7	14/4	15.55/4.44	16.5/4.71	17.97/5.13
		FRF404W-9-5-7	9.57/2.73	10.98/3.14	12.51/3.57	14.14/4.04	15.83/4.52	17.53/5.01	19.18/5.48	20.7/5.91	21.98/6.28
		FRF404W-11-5-9	12.07/3.45	13.93/3.98	15.92/4.55	18.02/5.15	20.16/5.76	22.29/6.37	24.28/6.94	25.98/7.42	27.21/7.77
		FRF404W-13-7-9	12.93/3.69	15.1/4.31	17.1/4.89	19/5.43	22.1/6.31	25.05/7.16	27.1/7.74	30.55/8.73	32.17/9.19
		FRF404W-18-7-11	16.59/4.74	19.54/5.58	22.27/6.36	25.13/7.18	29.03/8.29	32.94/9.41	36.69/10.48	40.27/11.51	43.57/12.45
		FRF404W-21-7-11	26.03/7.44	29.79/8.51	33.77/9.65	37.87/10.82	41.93/11.98	45.77/13.08	49.21/14.06	52.06/14.87	54.14/15.47
		FRF404W-26-9-11	24.64/7.04	28.59/8.17	33.03/9.44	37.91/10.83	43.18/12.34	48.69/13.91	54.28/15.51	59.71/17.06	64.74/18.5
R134A	40	FRF134W-3-3-5	2.7/0.77	3.06/0.87	3.46/0.99	3.89/1.11	4.36/1.25	4.85/1.39	5.36/1.53	5.86/1.67	5.86/1.67
		FRF134W-3-4-5	2.7/0.77	3.06/0.87	3.46/0.99	3.89/1.11	4.36/1.25	4.85/1.39	5.36/1.53	5.86/1.67	5.86/1.67
		FRF134W-4-4-7	3.65/1.04	4.15/1.19	4.69/1.34	5.29/1.51	5.93/1.69	6.6/1.89	7.3/2.09	7.99/2.28	7.99/2.28
		FRF134W-6-4-5	5.41/1.55	6.15/1.76	6.97/1.99	7.85/2.24	8.81/2.52	9.82/2.81	10.86/3.1	11.89/3.4	11.89/3.4
		FRF134W-6-4-7	5.41/1.55	6.15/1.76	6.97/1.99	7.85/2.24	8.81/2.52	9.82/2.81	10.86/3.1	11.89/3.4	11.89/3.4
		FRF134W-7.5-5-7	7/2	7.52/2.15	9/2.57	10.1/2.89	11.1/3.17	12.35/3.53	13.75/3.93	15.11/4.32	15.11/4.32
		FRF134W-11-5-7	10.8/3.09	12.39/3.54	14.08/4.02	15.91/4.55	17.85/5.1	19.86/5.67	21.85/6.24	23.71/6.77	23.71/6.77
		FRF134W-11-5-9	10.8/3.09	12.39/3.54	14.08/4.02	15.91/4.55	17.85/5.1	19.86/5.67	21.85/6.24	23.71/6.77	23.71/6.77
		FRF134W-12-5-7	11.5/3.29	12.94/3.7	14.73/4.21	16.3/4.66	18.23/5.21	21/6	23.27/6.65	24.43/6.98	24.43/6.98
		FRF134W-12-5-9	11.5/3.29	12.94/3.7	14.73/4.21	16.3/4.66	18.23/5.21	21/6	23.27/6.65	24.43/6.98	24.43/6.98
		FRF134W-15-5-9	14.2/4.06	15.5/4.43	16.93/4.84	18.97/5.42	21.13/6.04	24.57/7.02	27.1/7.74	30.1/8.6	30.1/8.6
		FRF134W-15-7-9	14.2/4.06	15.5/4.43	16.93/4.84	18.97/5.42	21.13/6.04	24.57/7.02	27.1/7.74	30.1/8.6	30.1/8.6
		FRF134W-18-7-9	16.1/4.6	18.5/5.29	20.22/5.78	24.46/6.99	27.69/7.91	30.69/8.77	35.5/10.14	38.39/10.97	38.39/10.97
		FRF134W-18-7-11	16.1/4.6	18.5/5.29	20.22/5.78	24.46/6.99	27.69/7.91	30.69/8.77	35.5/10.14	38.39/10.97	38.39/10.97

选型表 Model Selection

制冷剂 Refrigerant	冷凝温度 (℃) Condensing Temp	型号 Model	制冷量(KW)/(TR) 蒸发温度(℃) Evaporation temperature								
			-35	-30	-25	-20	-15	-10	-5	0	5
R134A	40	FRF134W-26-7-11	23.02/6.58	26.54/7.58	0.53/8.72	35.01/10	40.01/11.43	45.5/13	51.39/14.68	57.5/16.43	57.5/16.43
		FRF134W-26-9-11	23.02/6.58	26.54/7.58	30.53/8.72	35.01/10	40.01/11.43	45.5/13	51.39/14.68	57.5/16.43	57.5/16.43
		FRF134W-30-7-11	26.17/7.48	30.19/8.63	34.74/9.93	39.85/11.39	45.55/13.01	51.8/14.8	58.51/16.72	65.47/18.71	65.47/18.71
		FRF134W-30-9-11	26.17/7.48	30.19/8.63	34.74/9.93	39.85/11.39	45.55/13.01	51.8/14.8	58.51/16.72	65.47/18.71	65.47/18.71
		FRF134W-38-9-11	31/8.86	35.2/10.06	40.32/11.52	46.03/13.15	53.03/15.15	60.85/17.39	69.43/19.84	77.37/22.11	77.37/22.11

- 膨胀阀按照蒸发器冷量选型
- 如蒸发器有分液头，建议选择外平衡热力膨胀阀
- 注意制冷剂型号，选择对应的热力膨胀阀

- Model of expansion valve should be selected by refrigerating capacity of evaporators.
- External equalisation thermostatic expansion valve should be chosen for evaporators with distributors.
- Pay attention to the refrigerant when choosing expansion valve.

产品参数 Product Parameters

制冷剂 Refrigerant	型号 Model	名义制冷量Nominal Refrigerating Capacity		压力平衡 Pressure Equalisation	接口螺纹（接口尺寸）Thread(Connection Size)		
		冷吨 TR	千瓦 kW		进口端 Inlet 英制 inch	出口端 Outlet 英制 inch	外平衡口 External Equaliser
R22	FRF22W-3-3-5	3	10	外平衡 External Equalisation	3/8"ODF	5/8"ODF	1 /4" ODF
	FRF22W-3-4-5	3	10		1/2"ODF	5/8"ODF	
	FRF22W-4-4-7	4	14		1/2"ODF	7/8"ODF	
	FRF22W-6-4-5	6	20		1/2"ODF	5/8"ODF	
	FRF22W-6-4-7	6	20		1/2"ODF	7/8"ODF	
	FRF22W-7.5-5-7	7.5	27		5/8"ODF	7/8"ODF	
	FRF22W-11-5-7	11	38		5/8"ODF	7/8"ODF	
	FRF22W-11-5-9	11	38		5/8"ODF	1-1/8"ODF	
	FRF22W-12-5-7	12	43		5/8"ODF	7/8"ODF	
	FRF22W-12-5-9	12	43		5/8"ODF	1-1/8"ODF	
	FRF22W-15-5-9	15	54		5/8"ODF	1-1/8"ODF	
	FRF22W-15-7-9	15	54		7/8"ODF	1-1/8"ODF	
	FRF22W-18-7-9	18	63		7/8"ODF	1-1/8"ODF	
	FRF22W-18-7-11	18	63		7/8"ODF	1-3/8"ODF	
	FRF22W-26-7-11	26	92		7/8"ODF	1-3/8"ODF	
	FRF22W-26-9-11	26	92		1-1/8"ODF	1-3/8"ODF	
	FRF22W-30-7-11	30	104		7/8"ODF	1-3/8"ODF	
	FRF22W-30-9-11	30	104		1-1/8"ODF	1-3/8"ODF	
	FRF22W-38-9-11	38	134		1-1/8"ODF	1-3/8"ODF	
R134a	FRF134W-3.5-4-5	3.5	12		1/2" ODF	5/8" ODF	
	FRF134W-4.5-5-7	4.5	17		5/8" ODF	7/8" ODF	
	FRF134W-7-5-7	7	24		5/8" ODF	7/8" ODF	
	FRF134W-8-5-9	8	29		5/8" ODF	1-1/8" ODF	
	FRF134W-10-7-9	10	37		7/8" ODF	1-1/8" ODF	
	FRF134W-12-7-11	12	44		7/8" ODF	1-3/8" ODF	
	FRF134W-17-7-11	17	61		7/8" ODF	1-3/8" ODF	
	FRF134W-20-9-11	20	70		1-1/8" ODF	1-3/8" ODF	

产品参数 Product Parameters

制冷剂 Refrigerant	型号 Model	名义制冷量 Nominal Refrigerating Capacity		压力平衡 Pressure Equalisation	接口螺纹（接口尺寸）Thread Connection Size		
		冷吨 TR	千瓦 kW		进口端 Inlet 英制 inch	出口端 Outlet 英制 inch	外平衡口 External Equaliser
R404A	FRF404W-4-4-5	4	14	外平衡 External Equalisation	1/2" ODF	5/8" ODF	1/4" ODF
	FRF404W-5-5-7	5	18		5/8" ODF	7/8" ODF	
	FRF404W-7.5-5-7	7.5	26		5/8" ODF	7/8" ODF	
	FRF404W-9-5-7	9	31		5/8" ODF	7/8" ODF	
	FRF404W-11-5-9	11	39		5/8" ODF	1-1/8" ODF	
	FRF404W-13-7-9	13	45		7/8" ODF	1-1/8" ODF	
	FRF404W-18-7-11	18	64		7/8" ODF	1-3/8" ODF	
	FRF404W-21-7-11	21	72		7/8" ODF	1-3/8" ODF	
	FRF404W-26-9-11	26	92		1-1/8" ODF	1-3/8" ODF	
R410A	FRF410W-3.5-3-5	3.5	12		3/8" ODF	5/8" ODF	
	FRF410W-4.5-4-7	4.5	16		1/2" ODF	7/8" ODF	
	FRF410W-6.5-4-7	6.5	24		1/2" ODF	7/8" ODF	
	FRF410W-9-5-7	9	32		5/8" ODF	7/8" ODF	
	FRF410W-13-5-7	13	45		5/8" ODF	7/8" ODF	
	FRF410W-15-5-7	15	54		5/8" ODF	7/8" ODF	
	FRF410W-19-5-9	19	68		5/8" ODF	1-1/8" ODF	
	FRF410W-23-7-9	23	79		7/8" ODF	1-1/8" ODF	
	FRF410W-31-7-11	31	110		7/8" ODF	1-3/8" ODF	
	FRF410W-35-7-11	35	125		7/8" ODF	1-3/8" ODF	
	FRF410W-46-9-11	46	161		1-1/8" ODF	1-3/8" ODF	
R407C	FRF407C-3.5-4-7	3.5	14		1/2" ODF	7/8" ODF	
	FRF407C-5-4-7	5	19		1/2" ODF	7/8" ODF	
	FRF407C-7-5-7	7	25		5/8" ODF	7/8" ODF	
	FRF407C-10-5-7	10	36		5/8" ODF	7/8" ODF	
	FRF407C-12-5-9	12	42		5/8" ODF	1-1/8" ODF	
	FRF407C-15-7-9	15	53		7/8" ODF	1-1/8" ODF	
	FRF407C-18-7-11	18	62		7/8" ODF	1-3/8" ODF	

- 名义制冷量的工况条件为：蒸发温度te= + 5℃ 冷凝温度tK= + 40℃ 过冷度2℃
- Working Condition of Nominal Refrigerating Capacity: Evaporation Temperature: + 5℃; Condensation Temperature:+40℃; Superheat:3.5℃;Subcooling:2℃.

结构 Structure

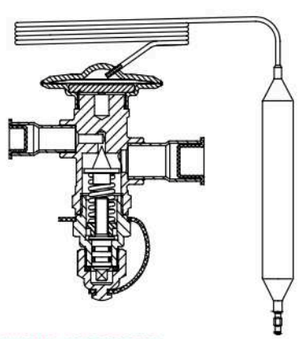

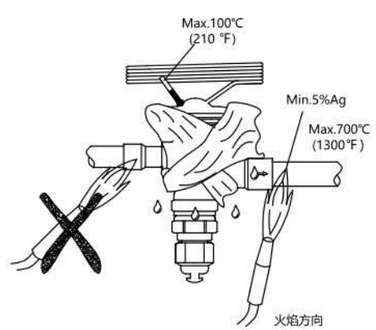

ERF ERFW 型热力膨胀阀
ERF ERFW Thermostatic Expansion Valve

ERF型（公制/英制螺口）
Model ERF（metric/inch flare）

ERFW型（英制螺口）
Model ERFW（inch flare）

产品概述 Product Description

- ERF、ERFW型热力膨胀阀用于调节蒸发器的液体制冷剂的供给量，可提供多种制冷剂及其各种工况下的充注，能满足冷藏设备、制冰机、除湿机以及各种蒸发温度范围内的制冷和空调的要求。

- Model ERF/FRFW thermal expansion valve are used to adjust the liquid refrigerant supply volume to the evaporator and they are suitable to various refrigerants and different charging condition. It meets the requirements of the cold storage facility, ice maker and dehumidifier as well as the refrigeration and air conditioning requirements under varied evaporation temperature.

特点 Features

- 采用大动力头结构模式，线性优良，过热度调节性能稳定。
- 采用新型结构，蒸发温度范围大，低温工作幅值大。
- 具有专利技术，膜片动作迟滞＜0.5k，阀门具有良好的稳定性。
- 阀帽采用防呆设计，防止其丢失，保证二次密封可靠性。

- The big power head structure with perfect linear performance has a stable adjustment on the degree of superheat.
- New structure has large scope of evaporation temperature and big work amplitude under low temperature.
- With proprietary technology, the diaphragm movement hysteresis <0.5k and the valve has good stability.
- The bonnet features fool-proofing design to prevent loss and ensure the reliability of sealing.

技术参数 Technical Parameters

适用制冷剂 Applicable Refrigerants:	R404A,R22、R134a 冷媒等介质
适用介质温度 Applicable Medium Temperature:	-40℃~+10℃
名义容量 Norminal Capacity:	3.5KW~158KW
过热度调节范围 Adjustable Range of Superheat:	2℃~8℃
出厂静热度调定值 Ex-Works Static Heat Adjustment	3.5℃
外均端泄露量 Outer Equilibrium End Leakage:	≤75ml/min
最大工作压力 Maximum Working Pressure:	2.8MPa
最大测试压力 Maximum Testing Pressure:	3.2MPa

- ERF （ ERFW ）和FRF型膨胀阀包括2种接口：螺口（ Flare ）和焊口（ 0DF ）。
- Model ERF (ERFW) and FRF thermostatic expansion valve have two types of connection: Flare/ODF.

- ERF（ERFW）和FRF型膨胀阀毛细管长度：标准1.5m，（φ10 - φ13的是3m），特殊情况可按用户要求。
- Capillary length of Model ERF (ERFW) and FRF thermostatic expansion valve can be standard 1.5 m, (φ10~ 13 is 3m) or customized.

选型表 Model Selection

制冷剂 Refrigerant	型号 Model	压力平衡 Pressure Equalisation	接口螺纹（接口尺寸）Thread(Connection Size)						名义制冷量 Nominal Refrigerating Capacity		
			进口端 Inlet		出口端 Outlet		外平衡口 External Equaliser		冷吨 TR	千瓦 kW	大卡 kcal/h
			公制 metric	英制 inch	公制 metric	英制 inch	公制 metric	英制 inch			
R22	ERF22-Φ1.0	内平衡（螺口）Internal Equalisation(flare)	M16X1.5		M18X1.5		—	—	1.0	3.5	3024
	ERF22-Φ1.5								1.6	5.6	4840
	ERF22-Φ2.0								2.0	7.0	6048
	ERF22-Φ2.5								2.5	8.8	7560
	ERF22-Φ3.0								3.0	10.5	9072
	ERF22-Φ4.0								5.0	17.6	15120
	ERF22-Φ5.0				M22X1.5				6.0	21.0	18144
	ERF22-Φ6.0								7.5	26.0	22680
	ERF22-Φ7.0		M18X1.5		M22X1.5				8.5	29.9	25704
	ERF22-Φ8.0								12.0	42.2	36288
	ERF22-Φ9.0								15.0	52.7	45360
R134a	ERF134-Ø1.0		M16X1.5		M18X1.5		—	—	0.5	1.75	1510
	ERF134-Ø1.5								0.7	2.5	2116
	ERF134-Ø2.0								1.5	5.2	4500
	ERF134-Ø2.5								1.6	5.6	4838
	ERF134-Ø3.0								2.0	7.0	6048
	ERF134-Ø4.0								3.0	10.5	9072
	ERF134-Ø5.0				M22X1.5				5.0	17.6	15120
	ERF134-Ø7.0		M18X1.5		M22X1.5				6.5	22.9	19656
	ERF134-Ø9.0								11.0	38.7	33264
R22	ERF22W-Ø1.0	外平衡 External Equalisation		3/8 SAE		1/2 SAE		1/4 SAE	1.0	3.5	3024
	ERF22W-Ø1.5								1.6	5.6	4840
	ERF22W-Ø2.0								2.0	7.0	6048
	ERF22W-Ø2.5								2.5	8.8	7560
	ERF22W-Ø3.0								3.0	10.5	9072
	ERF22W-Ø4.0								5.0	17.6	15120
	ERF22W-Ø5.0			1/2 SAE		5/8 SAE			6.0	21.0	18144
	ERF22W-Ø6.0								7.5	26.5	22680
	ERF22W-Ø7.0								8.5	29.9	25704
	ERF22W-Ø8.0								12.0	42.2	36288
	ERF22W-Ø9.0								15.0	52.7	45360
R134a	ERF134W-Ø1.0			3/8 SAE		1/2 SAE			0.5	1.75	1510
	ERF134W-Ø1.5								0.7	2.5	2116
	ERF134W-Ø2.0								1.5	5.2	4500
	ERF134W-Ø2.5								1.6	5.6	4838
	ERF134W-Ø3.0								2.0	7.0	6048
	ERF134W-Ø4.0								3.0	10.5	9072
	ERF134W-Ø5.0			1/2 SAE		5/8 SAE			5.0	17.6	15120
	ERF134W-Ø7.0								6.5	22.9	19656
	ERF134W-Ø9.0								11.0	38.7	33264

• 名义制冷量的工况条件为：蒸发温度te= + 5℃ 冷凝温度tK= + 40℃ 过冷度2℃
• Working Condition of Nominal Refrigerating Capacity: Evaporation Temperature te = + 5℃; Condensation Temperature tK = +40℃; Degree of Superheat 2℃

结构 Structure

ERF型（公制螺口）Model ERF(metric flare)

1.气箱头部件；2.纳子；3.封帽；4.过滤网部件；5.阀体；6.阀芯；7.调节弹簧；8.调节螺母；9.调节座；10.阀杆；11.阀帽；12.密封圈；13.O形圈；14.密封垫；15.保险带；16.公制纳子；17.封帽；18.传动杆

1、power element; 2、nut; 3、seal cap; 4、filting component; 5、valve body; 6、value element; 7、adjusting spring; 8、adjusting nut; 9、adjusting seat; 10、valve stem; 11、bonnet; 12、seal ring; 13、O-ring; 14、gasket; 15、security belt; 16、metric nut; 17、seal cap; 18、drive pin

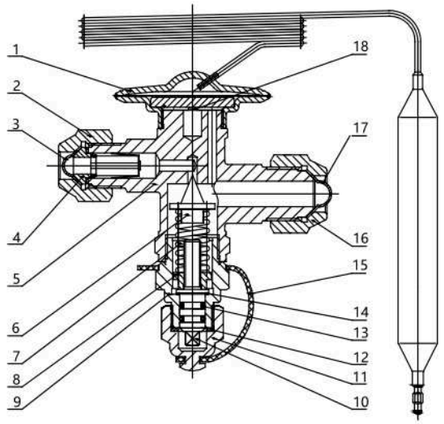

ERFW型（英制螺口）Model ERFW(inch flare)

1. 气箱头部件 power element
2. 纳子 nut
3. 封帽 seal cap
4. 过滤网部件 filting component
5. 阀体 valve body
6. 阀芯 valve element
7. 调节弹簧 adjusting spring
8. 调节螺母 adjusting nut
9. 调节座 adjusting seat
10. 阀杆 valve stem
11. 阀帽 bonnet
12. 密封圈 seal ring
13. O形圈 O-ring
14. 保险带 security belt
15. 密封垫 gasket
16. 纳子 nut
17. 封帽 seal cap
18. 传动杆 drive pin
19. 标贴 label
20. 纳子 nut
21. 封帽 seal cap

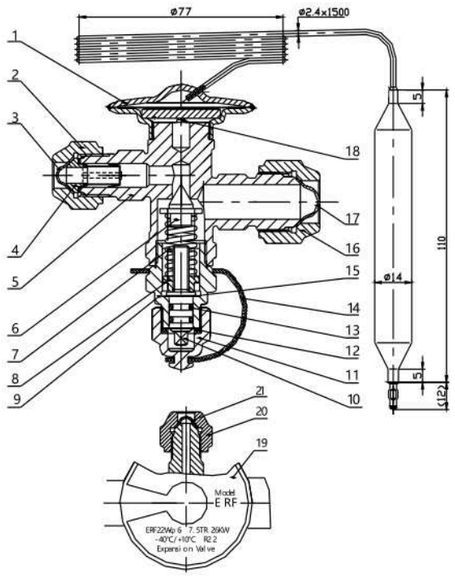

QRF 型热力膨胀阀
QRF Thermostatic Expansion Valve

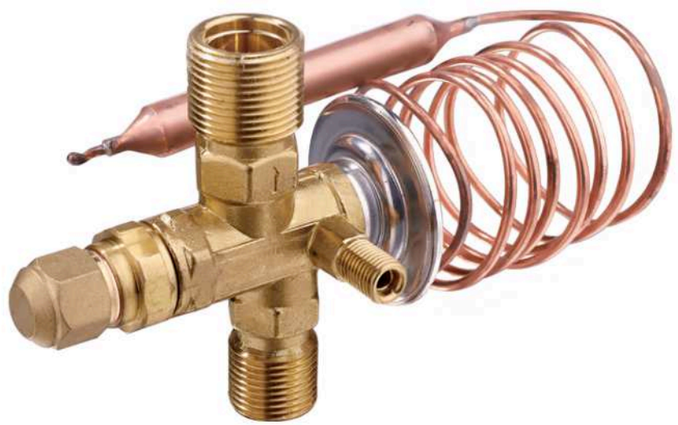

QRF型（英制螺口）
Model QRF（inch flare）

产品概述 Product Description

- QRF134aW型膨胀阀用于调节蒸发器中液体制冷剂的供给量
- QRF134aW型膨胀阀具有双向节流功能，被广泛运用在热泵、汽车空调制冷系统

- QRF134aW expansion Valve used for regulating the supply of liquid refrigerant in Evaporator.
- QRF134aW expansion valve with two-way throttling function is widely used in heat pump, Automotive air conditioning and refrigeration system

特点 Features

- 膨胀阀膜片采用知名供应商同一材料。
- 可提供MOP功能，可使压缩机电机不会因过高的蒸发压力而损伤。
- 具有发明专利的膜片结构，大大改善了低温下的工作性能。
- 阀帽采用二次密封结构，确保外泄漏为零。

- The expansion valve diaphragm is made of the same material as the well-known supplier.
- MOP function can be provided, so that the compressor motor will not be damaged by excessive evaporation pressure.
- The patented membrane structure greatly improves the working performance at low temperature.
- The valve bonnet adopts secondary sealing structure to ensure zero external leakage.

技术参数 Technical Parameters

适用制冷剂 Applicable Refrigerants	R134a
适用介质温度 Applicable Medium	-30℃~+10℃
过热度调节范围 Adjustable Range of Superheat	2℃~8℃
最大工作压力 Maximum Working Pressure	2.8MPa
最大测试压力 Maximum Testing Pressure	3.2MPa

QREF型热力膨胀阀毛细管长度：标准1.5m,特殊情况可按用户需求。
QREF type thermal expansion valve capillary length: standard 1.5m, special circumstances can be according to user demand.

选型表 Model Selection

制冷剂 Refrigerant	型号 Model	压力平衡 Pressure Equalisation	接口螺纹 Thread			名义制冷量 Nominal Refrigerating Capacity	
			进口端Intet	出口端Outlet	外平衡口 External Equaliser	TR	KW
R134a	QRF134aW-2.5-3-4	外平衡 External Equalisation	3/8 SAE	1/2 SAE	1/4 SAE	2.5	8
	QRF134aW-3.5-3-4		3/8 SAE	1/2 SAE		3.5	12
	QRF134aW-4.5-5-6		5/8SAE	3/4SAE		4.5	17
	QRF134aW-7-5-6		5/8SAE	3/4SAE		7	24
	QRF134aW-10-5-6		5/8SAE	3/4SAE		10	37

- 名义制冷量的工况条件为：蒸发温度5°C 冷凝温度35°C 过热度3.5°C 过冷度4°C
- The working condition of nominal refrigerating capacity is: evaporation temperature: 5°C; condensation temperature: 35°C; superheat: 3.5°C; supercooling degree: 4°C.

结构 Structure

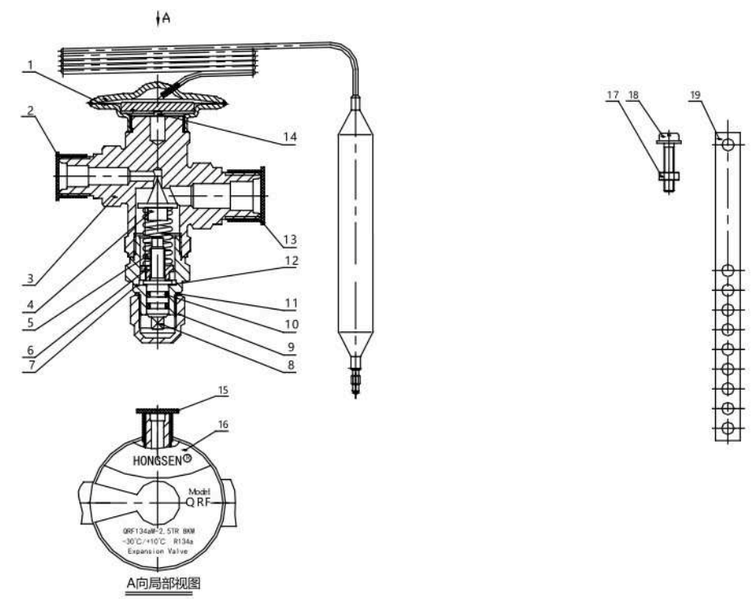

1、气箱头部件；2、防尘帽；3、阀体；4、阀芯；5、调节弹簧；6、调节螺母；7、调节座；8、阀杆；9、阀帽；10、O型圈；11、垫片；12、密封垫；13、防尘帽；14、传动杆；15、防尘帽；16、标贴；17、螺母；18、螺钉；19、抱箍

1、power element; 2、dust cap; 3、valve body; 4、spool; 5、adjusting spring; 6、adjusting nut; 7、adjusting seat; 8、valve stem; 9、valve bonnet; 10、O-ring; 11、gasket; 12、gasket; 13、dust cap; 14、drive pin; 15、dust cap; 16、label; 17、nut; 18、bolt; 19、hoop

球阀系列

BALL VALVE *Series*

适用于双向流动，用于冷冻、冷藏和空气调节装置的液体、暖气和热气管路上，阀座与密封处具有很好的密封性。
配有一个带二次密封的密封帽。

Suitable for bidirectional flow, used in refrigeration, refrigeration and air conditioning devices of liquid, heating and heat pipes, seats and seals have good sealing.
Equipped with a sealed cap with a secondary seal.

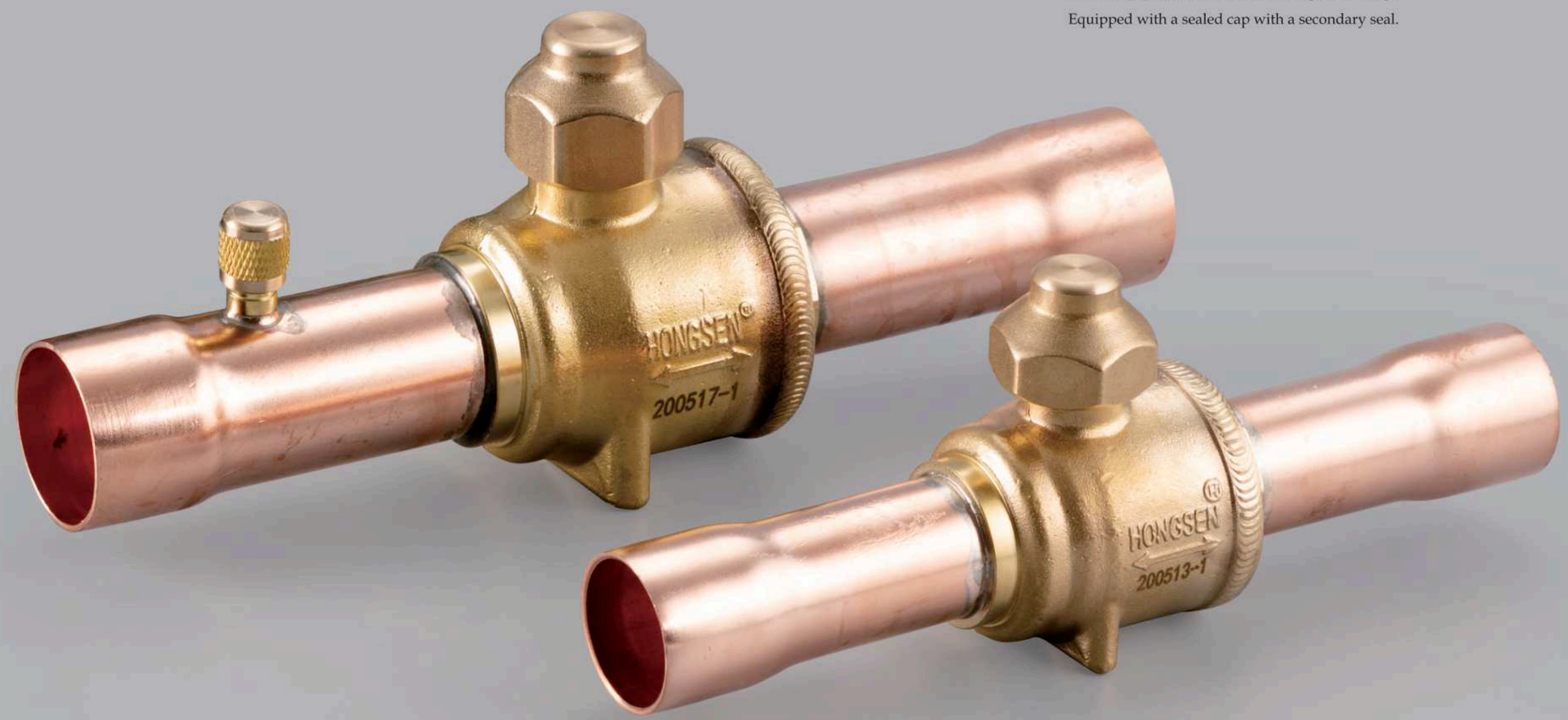

GBC型球阀 Model GBC Ball Valve

产品概述 Product Description

- GBC型球阀是手动调节的截止阀，适用于双向流动。
- GBC型球阀用于冷冻、冷藏和空气调节装置的液体、吸气和热气管路上。
- GBC型球阀的阀座与密封处具有很好的密封性。
- GBC型球阀为直通型，可提供最大的流量，同时该阀的工作温度范围宽。
- GBC型球阀配有一个带二次密封的密封帽。

- Model GBC ball valve is a manually regulated shut-off valve, which is applicable to two-direction flow.
- Model GBC ball valve is used on the liquid, air suction and hot vapor piping of the freezer, could store and air conditioning unit.
- The valve seat of Model GBC ball valve is well sealed with perfect sealing performance.
- Model GBC ball valve is a through-type ball valve with maximum flow rate and wide scope of operating temperature.
- Model GBC ball valve is equipped with a secondary sealing cap.

特点 Features

- 流动无压力降
- 从全开到全闭只需转动1/4圈
- 全开和全闭均有旋转限位
- 阀杆顶端标记是阀的全开和全闭
- 具有双向流动性
- 氩弧焊接结构
- 防爆阀杆设计
- 改性的PTFE密封
- 可防止内部积液
- 能安装在控制板上

- No pressure drop in flow.
- Only turn 1/4 circle to make valve full open or full close.
- Turning stop for full open or full close.
- Full Open and Full Close mark on top of valve stem.
- Two-direction flow is available.
- Argon arc welded structure.
- Explosion-proof valve stem design.
- Modified PTFE sealing.
- Inside liquid accumulation is avoided.
- Could be mounted on the control panel.

技术参数 Technical Parameters

适用制冷剂 Applicable Refrigerant:	HCFC or HFC(客户选择)(Customer choice)
适用介质温度 Applicable Medium Temperature:	-40~+120℃
最大工作压力 MAX.Working Pressure	4.5MPa
最大耐压压力 MAX. Compression Pressure	6.5MPa
制冷剂年泄漏量 Yearly Leakage of Refrigerant	≤2g R22/a

- GBC型球阀包括2种阀型：一种带充注检测口，一种不带充注检测口。
- Two types of Model GBC ball valve are available: one is equipped with the charging and inspection port; the other is not equipped with the charging and inspection port.

选型表 Model Selection

型号Model	规格Size	通径OD(mm)	Kv值(m3/h)	型号Model	规格Size	通径OD(mm)	Kv值(m3/h)
GBC-6S	1/4(Φ6)	Φ10	2	GBC-28	1-1/8(Φ28)	Φ25	52.0
GBC-10S	3/8(Φ10)	Φ10	5.7	GBC-35	1-3/8(Φ35)	Φ31	80
GBC-12S	1/2(Φ12)	Φ10	5.7	GBC-42	1-5/8(Φ42)	Φ37	121
GBC-10	3/8(Φ10)	Φ14	5.7	GBC-54	2-1/8(Φ54)	Φ50	200
GBC-12	1/2(Φ12)	Φ14	10.6	GBC-67	2-5/8(Φ67)	Φ50	200
GBC-16	5/8(Φ16)	Φ14	14.1	GBC-79	3-1/8(Φ79)	Φ50	200
GBC-19	3/4(Φ19)	Φ16	20.4	GBC-67A	2-5/8(Φ67)	Φ60.5	310
GBC-22	7/8(Φ22)	Φ19	28.2	GBC-79A	3-1/8(Φ79)	Φ73	700

结构 Structure

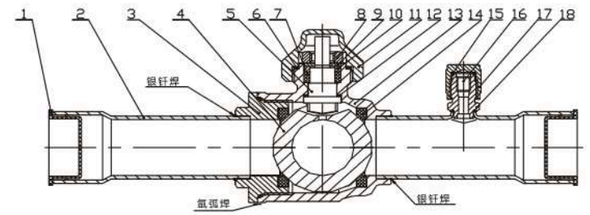

1.防尘帽 dust cap
2.接管 copper tube
3.阀盖 valve bonnet
4.阀球 valve ball
5.阀杆 valve stem
6.阀帽垫片 cap gaskt
7.填料环 packing ring
8.锁紧螺母 locknut
9.锁片 lock;
10.压圈 clamping ring
11.阀帽 valve cap
12.密封垫圈（PTFE） sealing washer
13.阀体 valve body
14.密封垫片（改性PTFE） seal gasket
15.密封环 sealing ring
16.气门芯 valve core
17.充注帽 charging cap
18.充注阀体 charging valve

外形尺寸 Overall Dimension

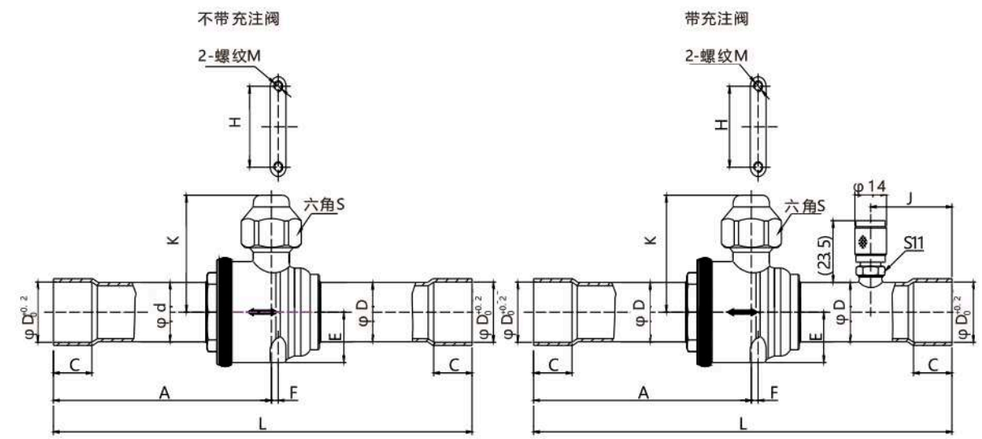

型号 Model	A	C	D	d	E	F	K	M	J	H	L
GBC-6S	57	6	6.5	10	14	0	32.5	M4	20	44	110
GBC-10S	65	8	10.1	10	14	0	32.5	M4	26	44	126
GBC-12S	67	10	12.8	12	14	0	32.5	M4	26	44	130
GBC-10	73	9	10.1	16	14.5	2	38	M4	30	50	138
GBC-12	83	10	12.8	16	14.5	2	38	M4	30	50	159
GBC-16	83	12	16.1	16	14.5	2	38	M4	30	50	159
GBC-19	97	14	19.1	19	16.5	3	42	M4	36	58	185
GBC-22	96	17	22.3	22	19	3	43	M4	36	58	185
GBC-28	108	20	28.7	28	24	4	52.5	M4	44	66	208
GBC-35	130	25	35.2	35	30	5	64	M6	44	80	251
GBC-42	145	29	41.5	41.3	35	6	74	M6	56	87	281
GBC-54	157	35	54.2	54	45.5	9	83.5	M6	56	106	305
GBC-67	157	37	67	54	45.5	9	83.5	M6	63	106	305
GBC-79	157	40	79.6	54	45.5	9	83.5	M6	63	106	305
GBC-67A	171	37	67	66.8	54	16	94	M6	72	117	343
GBC-79A	207	37	79.6	79.4	64	16	104	M6	80	117	413

QF-CO2型 球阀 Model QF-CO2 Ball Valve

产品概述 Product Description

- 双向流动，可任意安装。
- 精密铸造阀体带不锈钢管。
- 全阀口结构与阀道内径匹配，流动无压力降。
- 防爆阀杆设计。
- 特选兼容CO2运行环境的密封圈。
- 全开和全闭均有旋转限位。
- 阀杆部位具有二次可靠密封结构。

- Model GBC ball valve is a manually regulated shut-off valve, which is applicable to two-direction flow.
- Model GBC ball valve is used on the liquid, air suction and hot vapor piping of the freezer, could store and air conditioning unit.
- The valve seat of Model GBC ball valve is well sealed with perfect sealing performance.
- Model GBC ball valve is a through-type ball valve with maximum flow rate and wide scope of operating temperature.
- Model GBC ball valve is equipped with a secondary sealing cap and the metal wire could be used to prevent the sealing cap from missing and avoid any mistake operation in maintenance.

特点 Features

- 流动无压力降
- 从全开到全闭只需转动1/4圈
- 全开和全闭均有旋转限位
- 阀杆顶端标记是阀的全开和全闭
- 具有双向流动性
- 氩弧焊接结构
- 防爆阀杆设计
- 改性的PTFE密封
- 可防止内部积液
- 能安装在控制板上

- No pressure drop in flow.
- Only turn 1/4 circle to make valve full open or full close.
- Turning stop for full open or full close.
- Full Open and Full Close mark on top of valve stem.
- Two-direction flow is available.
- 认证Certification • ISO9001 • QS • UL
- Argon arc welded structure.
- Explosion-proof valve stem design.
- Modified PTFE sealing.
- Inside liquid accumulation is avoided.
- Could be mounted on the control panel.

技术参数 Technical Parameters

工作温度 Working temperature:	-50℃～+150℃
最大工作压力 MAX.Working Pressure:	12MPa

选型表 Model Selection

型号Model	规格Size 焊接口外径（mm）	通径OD(mm)	Kv值(m3/h)
QF12-CO2	12	10	10
QF16-CO2	16	14	14
QF19-CO2	19	16	20
QF22-CO2	22.3	19	28
QF28-CO2	28.6	25	52
QF35-CO2	35	31	80
QF42-CO2	41.3	37	121
QF54-CO2	56	50	200

1)Kv值：密度为1吨/m³的水在通过电磁阀的压差等于100KPa时的流量，单位为m³/h；
2)气态介质的MOPD约高0.1MPa。
1) Kv value: the flow of water with density of 1 ton/ m³ when passing through the solenoid valve under 100KPa differential pressure
2) MOPD of gaseous medium is about 0.1MPa.

结构 Structure

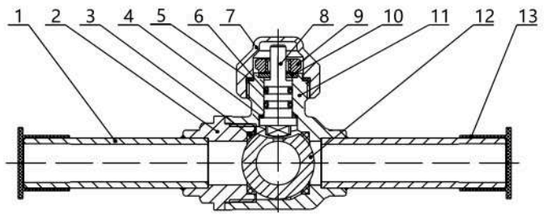

1. 接管 copper tube
2. 阀盖 valve bonnet
3. 密封垫片 seal gasket
4. 密封垫 A seal
5. 阀帽垫片 cap gaskt
6. 密封圈 Seal ring
7. 阀帽 valve cap
8. 阀杆 valve stem
9. 锁紧螺母 locknut
10. 限位片 Limiter
11. 阀体 valve body
12. 阀球 valve ball
13. 防尘帽 dust cap

外形尺寸 Overall Dimension

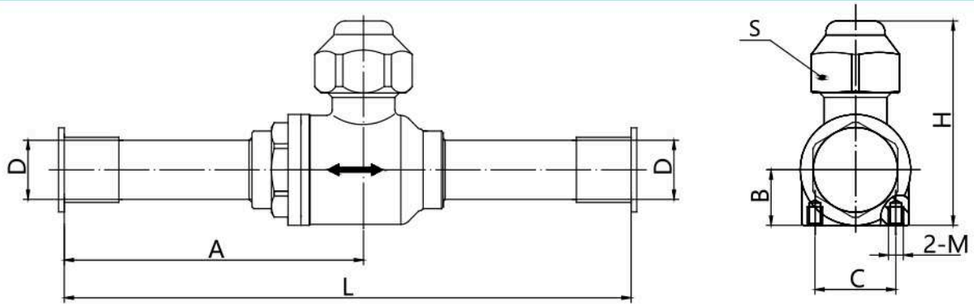

型号 Model	外形尺寸 Overall Dimension							
	D	L	H	A	B	C	M	S
QF12-CO2	φ12	131.5	56.1	68	19	16	M5	S24
QF16-CO2	φ16	154	55.3	81.3	15	22	M5	S24
QF19-CO2	φ19	168	62	89.8	19	30	M5	S24
QF22-CO2	φ22.3	193.5	62	102.6	19	30	M5	S24
QF28-CO2	φ28.6	213	82.4	112.3	30	30	M5	S28
QF35-CO2	φ35	232.6	98.7	125	30	48	M6	S32
QF42-CO2	φ41.3	245.3	108.5	127.1	34	55	M6	S32
QF54-CO2	φ56.3	304	129.9	163	45.5	74	M6	S36

视液镜系列

SIGHT GLASS *Series*

使用改性PTEE密封材质，适用于多种制冷剂及冷冻油，又具有很好的密封性能。
采用防爆压结构，观察窗清晰而安全。
采用优质铜棒锻压，强度高，塑性好。

The modified PTEE seal material is suitable for various refrigerants and refrigerant oils.
It also has good sealing performance.
The explosion-proof structure is adopted, and the observation window is clear and safe.
High quality copper bar is used for forging, high strength and good plasticity.

SGN型液视镜 Model SGN Sight Glass

产品概述 Product Description

- SGN型视液镜用于制冷、空调装置的液体管路上，用来指示制冷剂的流动状况、制冷剂中的含水量及油分离器回油管路中润滑油的流动状况。
- SGN型视液镜带有一潮湿指示器，通过改变颜色来指示制冷剂中的含水量。
- SGR型视液镜用于贮液器中制冷剂的液位或压缩机曲轴箱中润滑油的液位。
- SGN型视液镜均使用改性PTFE密封材料，适用于多种制冷剂及冷冻油又具有很好的密封性能。
- SGN型/SGR型视液镜采用防爆压接的结构，观察窗清晰而安全。

- Both Model SGN sight glass is used on the liquid piping of the refrigeration and air conditioning unit to indicate the flow condition of the refrigerant, water cut of the refrigerant and lubricant oil flow condition of the oil return piping on the oil separator.
- Model SGN sight glass and is equipped with one moisture indicator, which will change color to indicate the water cut in the refrigerant.
- Model SGR sight glass is used to indicate the level of the refrigerant in the liquid drum and the lubricant oil level in the compressor crankcase.
- The modified PTFE sealing is used in bothModel SGN sight glass and Model SGR sight glass, which is applicable to various refrigerants and oils with perfect sealing performance. The structure of both Model SGN sight glass and Model SGR sight glass is an explosion-proof press fit and the viewing glass is clear and safety.

技术参数 Technical Parameters

适用制冷剂 Applicable Refrigerant:	HCFC and HFC
适用介质温度 Applicable Medium Temperature:	-40℃~+80℃
最大工作压力 MAX.Working Pressure	4.5MPa
最大耐压压力 MAX. Compression Pressure	6.8MPa
制冷剂年泄漏量 Yearly Leakage of Refrigerant	≤2g R22/a

注意：全封闭压缩机的允许含水量一般在30 - 75ppm之间，而其他压缩机则略高。为使系统得到有效保护，必须谨慎地监视指示器，若颜色变为黄色，则必须更换干燥器。

Note: For the fully enclosed compressor, generally the allowable water cut is in a range 30~75ppm, but for other types of compressor, the water cut will be higher slightly. For an effective protection, it is necessary to monitor the indicator carefully and replace the drier immediately if the color is changed into yellow.

特点 Features

SGN

- 用于HCFC/HFC制冷剂
- 指示系统中过高的含水量
- 制冷剂液体无过冷度指示
- 冷剂充注量不足指示
- 焊口、螺口两种接口

Model SGN

- Be applicable to HCFC/HFC refrigerants.
- Indicate high water cut in system if any.
- Indicate no overcooling in refrigerant liquid.
- Indicate insufficient charging of refrigerant if any.
- Both welded and threaded connections are available.

SGR型

- HCFC/HFC制冷剂
- 贮液器中液位指示
- 压缩机曲轴箱中油液位指示
- NPT螺纹连接

Model SGR

- Be applicable to HCFC/HFC refrigerants.
- Indicate the liquid level in the liquid drum.
- Indicate the oil level in the compressor crankcase.
- NPT threaded connection.

选型表 Model Selection

焊口型号 Model of Welded Connection	规格 Size	螺口型号 Model of Threaded Connection	规格 Size
SGN-1/4 ODF	1/4(Φ6)	SGN-1/4 SAE	1/4 SAE
SGN-3/8 ODF	3/8(Φ10)	SGN-3/8 SAE	3/8 SAE
SGN-1/2 ODF	1/2(Φ12)	SGN-1/2 SAE	1/2 SAE
SGN-5/8 ODF	5/8(Φ16)	SGN-5/8 SAE	5/8 SAE
SGN-3/4 ODF	3/4(Φ19)	SGN-3/4 SAE	3/4 SAE
SGN-7/8 ODF	7/8(Φ22)	SGN-3/4NPT	3/4NPT
SGN-$1\frac{1}{8}$ ODF	$1\frac{1}{8}$(Φ28)	SGR-G3/4	G3/4

含水量与颜色的关系 Correlation betwen Water Cut and Color

	Water Cut(ppm) 含水量(百万分之一)					
	25℃	25℃	25℃	43℃	43℃	43℃
	绿色	中间颜色	黄色	绿色	中间颜色	黄色
	Green/DRY	Medium Color	Yellow/WET	Green/DRY	Medium Color	Yellow/WET
R22/R502	<30	30~120	>120	<50	50~200	>200
HFC-134a	<30	30~100	>100	<45	45~170	>170
R404a	<20	20~70	>70	<25	25~100	>100
R407c	<30	30~140	>140	<60	60~225	>225
R507	<15	15~60	>60	<30	30~110	>110

结构 Structure

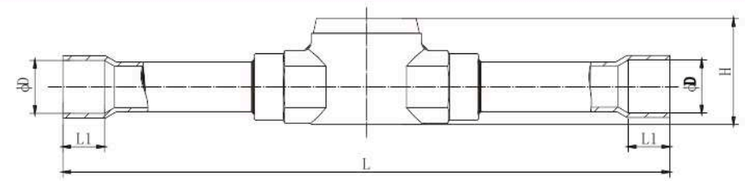

焊口视液镜
Soldering type sight glass

Model	L	L1	D	H
SGN-1/4 ODF	102	7	6.5	21.5
SGN-3/8 ODF	119	8	10.1	22.5
SGN-1/2 ODF	146	10	12.8	26.5
SGN-5/8 ODF	152	14	16.1	29.5

Model	L	L1	D	H
SGN-3/4 ODF	167	16	19.2	35
SGN-7/8 ODF	173	17	22.2	39
SGN-1-1/8 ODF	216	20	28.7	44.5

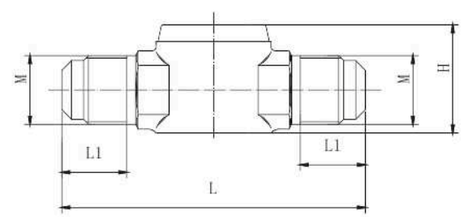

螺口视液镜
Flare type sight glass

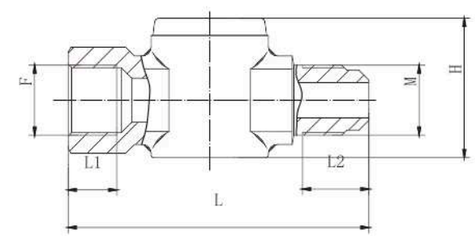

内外螺口视液镜
M/F flare type sight glass

Model	L	L1	H	Thread M
SGN-1/4 SAE	64	13	21.5	7/16-20UNF
SGN-3/8 SAE	70	15	25	5/8-18UNF
SGN-1/2 SAE	75	16	26.5	3/4-16UNF
SGN-5/8 SAE	80	18	29.5	7/8-14UNF
SGN-3/4 SAE	90	20.5	35	1-1/16-14UNS

Model	L	L1	L2	H	Thread F/M
SGN-1/4-MF	60	8.5	12	25	7/16-20UNF
SGN-3/8-MF	68	11	15	31.5	5/8-18UNF
SGN-1/2-MF	70	11.5	16	34.5	3/4-16UNF
SGN-5/8-MF	78	13	18	38	7/8-14UNF

单向阀\截止阀

CHECK VALVE / SHUT OFF VALVE *Series*

（手阀）高品质膜片确保外密封性，独特结构很小力矩可实现内密封。
（单向阀）确保唯一的正确的流动方向，阀口有很好的密封性。

(Hand valve) High sensitive diaphragm ensures good sealing, and allows small torque power to seal the valve.
One-way Valve) To ensure the only correct direction of flow, valve has strong sealing performance .

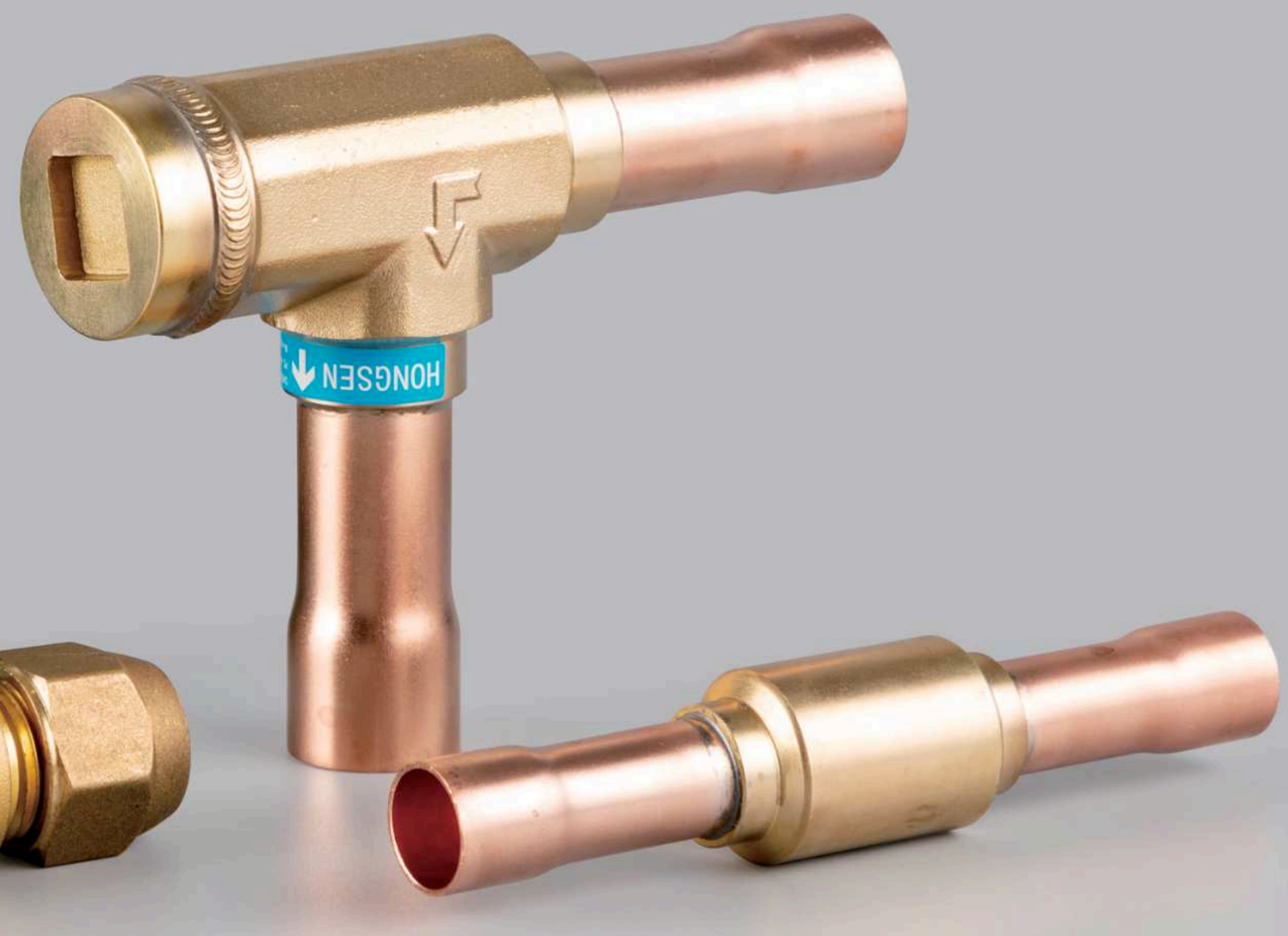

CV型单向阀 Model CV Check Valve

产品概述 Product Description

- CV和CVRH型单向阀用于冷冻、冷藏和空气调节装置的液体、吸气和热气管路上。
- CV和CVRH型单向阀可提供超大尺寸连接，以提高单向阀应用的灵活性。

- Model CV check valve is used on the piping of liquid, suction gas or hot air on the freezing, cold storage and air conditioner units.
- The valve seat and seals of Model CV check valve have excellent sealing performance.
- For Model CV check valve, both threaded and welded connections are available.

特点 Features

- 该阀可确保唯一的正确的流动方向。
- 有直通阀和角阀两种形式，阀座和密封处具有很好的密封性。
- 可防止制冷剂从高温蒸发器向低温蒸发器回流。
- 内置减震活塞，可安装在有压力脉冲的地方，如压缩机的排气管路上。
- CV单向阀可提供螺口和焊口两种接口。
- CVRH具有ΔP=0.3bar的加强弹簧，应用于压缩机并联的制冷装置中。

- Ensure one flow direction and avoid reversal
- With the built-in damper and could be mounted on the piping with pressure pulsation.
- Prevent refrigerant back flow from high temperature evaporator to low temperature evaporator.
- Applicable to the refrigeration unit in parallel with compressor.
- Both direct flow type and right-angle type are available.

技术参数 Technical Parameters

适用制冷剂 Applicable Refrigerant:	HCFC或HFC（客户指定）
适用介质温度 Applicable Medium Temperature:	-50℃ ~ +140℃
最大工作压力 MAX.Working Pressure	46bar
最大试验压力 Maximum Test Pressure	60bar

选型表 Model Selection

型号 Model	型式 Type	规格 Spes		通径(mm) I.D.(mm)	Kv值(m3/h) Kv(m3/h)
		喇叭口Flare	焊接口Welded		
CV-6	直通型	1/4 SAE	/	4.8	0.56
CV-6T	直通型	/	1/4 ODF	4.8	0.56
CV-10	直通型	1/4 SAE	/	8	1.43
CV-10GT	直通型	/	φ10 ODF	8	1.43
CV-12	直通型	1/2 SAE	/	10	2.05
CV-12T	直通型	/	1/2 ODF	10	2.05
CV-16	直通型	5/8 SAE	/	13	3.60
CV-16T	直通型	/	5/8 ODF	13	3.60
CV-19	直通型	3/4 SAE	/	16	5.50
CV-19T	直通型	/	3/4 ODF	16	5.50
CVRH-22	直角型	/	7/8 ODF	19	8.50
CVRH-28	直角型	/	1-1/8 ODF	26	19.0
CVRH-35	直角型	/	1-3/8 ODF	31	29.0
CVRH-42	直角型	/	1-5/8 ODF	31	30.0

1）Kv值：密度为1吨/m³的水在通过单向阀的压差等于100KPa时的流量，单位为m³/h
1) Kv value: When the pressure differential is 100KPa, the flowrate at m³/h water in density 1 t/m³ flows through the solenoid valve.

结构 Structure

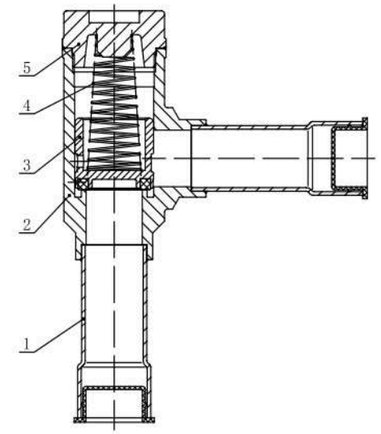

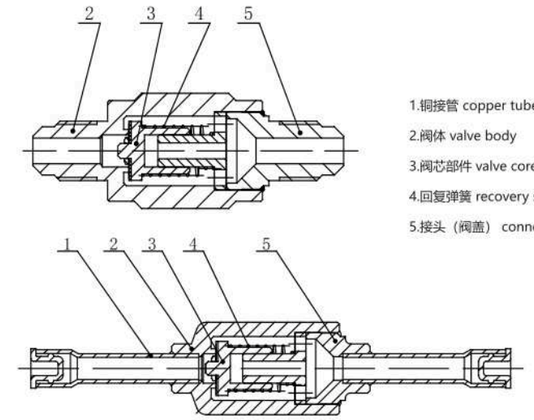

1.铜接管 copper tube
2.阀体 valve body
3.阀芯部件 valve core
4.回复弹簧 recovery spring
5.接头（阀盖） connection(valve cover)

外形尺寸 Overall Dimension

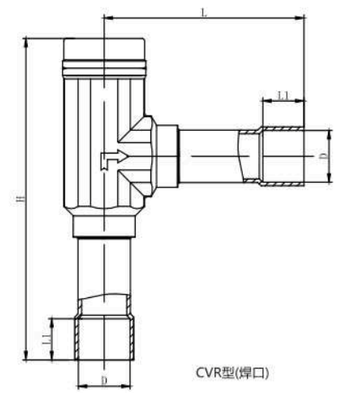

CVR型(焊口)

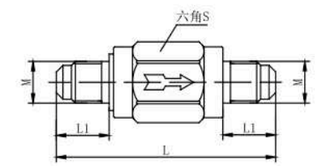

CV型（螺口）

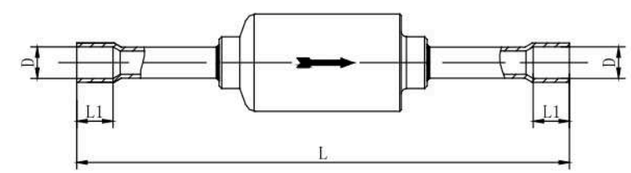

CV-T型(焊口)

型号 Model	外形尺寸 Overall Dimension				重量 Weight(g)	重量（加2只接管螺母）(g)
	L	M	L1	S		
CV-6	58	7/16-20UNF	14	19	68.6	101.8
CV-10	62	5/8-18UNF	16	21	91.6	153.6
CV-12	68	3/4-16UNF	18	24	125.3	193.4
CV-16	78	7/8-14UNF	21	27	172.1	270.0
CV-19	90	1-1/16-14UNS	24	32	277.3	417.4
	L	D	L			
CV-6T	95	$\varphi 6.5^{+0.15}$	7		67.9	
CV-10GT	109	$\varphi 10.1^{+0.15}$	8		79.1	
CV-12T	119	$\varphi 12.8^{+0.15}$	10		104.6	
CV-16T	138	$\varphi 16.1^{+0.15}$	14		148.8	
CV-19T	150	$\varphi 19.2^{+0.15}$	16		212.6	
	L	D	L1	H		
CVRH-22	84	$\varphi 22.3^{+0.15}$	17	136.5	474.7	
CVRH-28	113	$\varphi 28.7^{+0.15}$	20	184	1040	
CVRH-35	126	$\varphi 35.2^{+0.15}$	25	197	1120	
CVRH-42	126	$\varphi 41.5^{+0.15}$	29	197	1125	

注：①上述重量不带钩子；②钩子单重：1/4-18g、3/8-30g、1/2-33g、5/8-50g、3/4-93g。
Nite:(1) Nut is excluded from above mentioned welght. (2) Nut weight:1/4-18g,3?8-30g,1/2-33g,5/8-50g and 3/4-93g.

KM型 膜片式手阀 Model KM Diaphragm Hand Valve

产品概述 Product Description

- KM型手阀是一种手动膜片式截止阀，适用于单向流动
- KM型手阀用于冷冻/冷藏和空气调节装置的液体/吸气和热气管路上
- KM型手阀按接口方式分为两种：一种是螺口连接（SAE），可提供螺口规格1/4 SAE至3/4 SAE，另一种是焊口连接ODF，可提供接口尺寸1/4”至7/8”。所有KM型手阀都有安装固定孔，可用于仪表板上的安装。

- Model KM hand valve is a manually operated diaphragm stop valve for one-way flow control.
- Model KM hand valve is mounted on the liquid, air suction and hot air piping in the \refrigeration, cold storage and air conditioner.
- Two types of connection are available for Model KM hand valve, that is, threaded connection (SAE) with threading size 1/4 SAE to 3/4 SAE and welded connection both ODF, structure hand valves have connection size 1/4” to 7/8”.
- All Model KM hand valves are equipped with mounting hole for the installation on the i nstrument panel.

特点 Features

- 带有2片不锈钢膜片，在阀的整个使用寿命期间内防止泄漏。
- 阀口采用弹性密封，用很小的力矩就可将阀关闭。
- 特殊阀盖设计，防止水、粉尘等进入阀内部。
- 阀杆只需旋转一圈半就可全开或全闭，操作便捷。

- There are 2 pieces of stainless steel diaphragm ta prevent the hand valve from leakage during the whole service life of the hand valve.
- The elastic sealing is used on the valve port so that the hand valve could be shut off by small torque.
- The special valve bonnet design a sued to prevent the hand valve from water or dust penetration.
- The hand valve is easy to be operated for full open or half open just by turning the valve stem for one and half turn

技术参数 Technical Parameters

适用制冷剂 Applicable Refrigerant:	HCFC、HFC
适用介质温度 Applicable Medium Temperature:	-25℃~+100℃
最大工作压力 MAX.Working Pressure	3.0MPa
使用压力范围 Scope of Operating Pressure	-0.1MPa~2.1MPa
最大耐压试验压力 Maximum Hydrostatic Test Pressure	4.5MPa

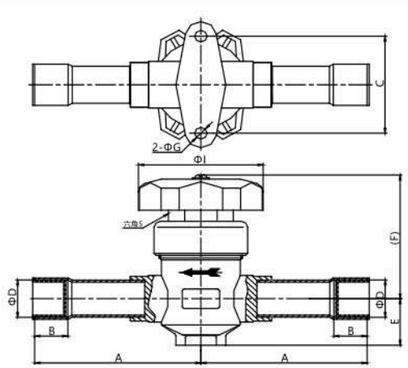

ODF焊口结构

结构 Structure

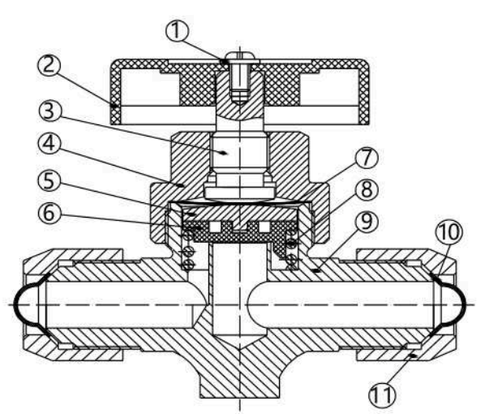

1．螺钉 screw2．手轮 hand wheel 3．阀杆 valve stem
4．阀盖 valve bonnet 5．铜片 copper sheet 6．阀芯 valve element
7．膜片 diaphragm 8．弹簧 spring 9．阀体 valve body
10．防尘帽 dust cap 11．纳子（接管螺母） nut (piping nut)

选型表 Model Selection

型号 Model	喇叭口 Flare	焊接口(带铜管) Welded(with copper tube)	Kv(m³/h)
KM-1/4	1/4 SAE	1/4 ODF	0.28
KM-3/8	3/8 SAE	3/8 ODF	0.30
KM-1/2	1/2 SAE	1/2 ODF	1.30
KM-5/8	5/8 SAE	5/8 ODF	1.80
KM-3/4	3/4 SAE	3/4 ODF	3.65
KM-7/8	——	7/8 ODF	3.65

外形尺寸 Overall Dimension

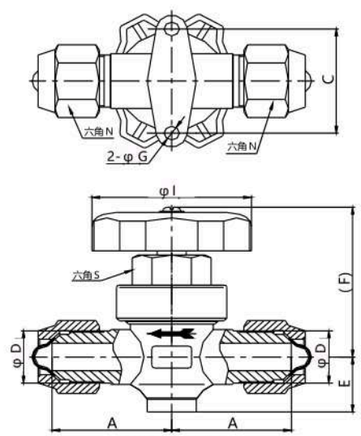

SAE 喇叭口结构

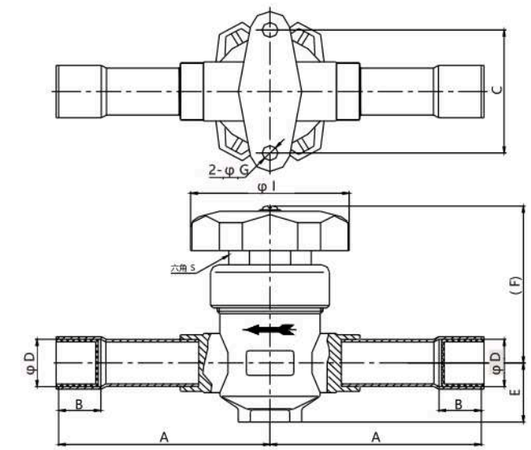

ODF 焊口结构

型号Model	外形尺寸 Overall Dimension										
	A	B	C	ΦD	E	(F)	ΦG	ΦI	S	N	螺纹 M Thread M
1/4 SAE	28.5	——	36	——	14	(53)	Φ4.5	Φ53	S18	S17	7/16-20UNF
1/4 ODF	51	7		6.5						——	——
3/8 SAE	31	——		——						S22	5/8 -18UNF
3/8 ODF	59	8		9.7						——	——
1/2 SAE	39	——	38	——	19	(57)	Φ5		S22	S24	3/4 -16UNF
1/2 ODF	66	10		12.8						——	——
5/8 SAE	39	——		——						S27	7/8-14UNF
5/8 ODF	74	14		16.1						——	——
3/4 SAE	50	——	50	——	24	(64)	Φ6	Φ60	S27	S32	1-1/16-14UNS
3/4 ODF	80	16		19.1						——	——
7/8 ODF	80	17		22.3				Φ71		——	——

避震波纹金属软管系列

VIBRATION RE-SISTANT CORRUGATED METAL HOSE

Series

软管能够适度的弯曲，具有很好的耐疲劳性能。
适用于全制冷剂，采用三位一体焊将接头、网套、压圈一起氩弧焊而成，具有安全、强度高、防腐、耐热。
具有良好的吸震和补偿热位移。

The hose can be moderately bent and has good fatigue resistance.
Suitable for all refrigerants, Trinity welding joint, mesh, ring with argon arc welding, with safety, high strength, corrosion resistance, heat resistance.
It has good shock absorption and compensation thermal displacement.

VAFX型避震管
VAFX Type vibration Eliminator

产品概述 Product Description

• VAFX型避震管是设计用于安装在制冷系统和空调的吸气和排气管路中，可降低由压缩机产生并通过系统管路传输的震动。	• VAFX Type vibration Eliminator is designed to be assembled in refrigeration or air conditioning system to lower the vibration from compressors.

产品特点 Features

• 波纹管材质为SUS316L，耐腐蚀性能优异。 • 采用三位一体焊将接头、网套、压圈一起氩弧焊，具有安全、强度高等特点。 • 具有良好的吸震和补偿热位移。	• SUS316L corrugated pipe supports with high corrosion resistance • Trinity Argon Arc welding of wire sleeve, pipe connector and clamping ring makes the vibration eliminator stronger and more safety. • Perfect vibration resistance and good compensation for the heat displacement.

技术参数 Technical Parameters

适用制冷剂 Applicable Refrigerants	HCFC/HFC
适用介质温度 Applicable Medium Temp	-40℃~+150℃
最大工作压力 MAX Working Pressure	见选型尺寸表(See Model Selection table)
最大耐压压力 Maximum Proof Pressure	最大工作压力的1.5倍(1.5 time of the M.W.P.)

外形结构 Configuration

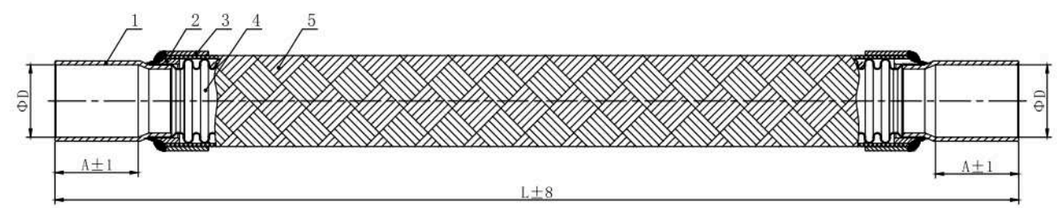

1.紫铜接管 Copper bush；2.波纹管接头 Pipe Connector；3.压圈 Clamping Ring.；4.波纹管 Corrugated Pipe.；5.网套 Wire Sleevering

选型表 Model Selection

型号 Type	规格 Size	外形尺寸 (mm) Outline Dimension (mm)			最大工作压力 (MPa) Max.Working Pressure (MPa)	最小弯曲半径 (mm) Min.Bending Radius (mm)	
		A	L	D		静态 Static(Rj)	动态 Dynamic(Rd)
VAFX-038-10	3/8	16	210	$9.70^{+0.15}_{0}$	4.5	80	180
VAFX-012-12	1/2	18	230	$12.80^{+0.2}_{0}$		95	215
VAFX-058-16	5/8	20	250	$16.10^{+0.2}_{0}$		120	270
VAFX-034-19	3/4	22	260	$19.10^{+0.2}_{0}$		145	325
VAFX-078-22	7/8	26	300	$22.30^{+0.2}_{0}$		160	360
VAFX-100-25	1	32	330	$25.60^{+0.2}_{0}$		175	400
VAFX-118-28	1-1/8	30	330	$28.70^{+0.2}_{0}$		175	400
VAFX-114-32	1-1/4	50	400	$32.10^{+0.2}_{0}$	4.2	225	510
VAFX-138-35	1-3/8	35	400	$35.20^{+0.2}_{0}$		225	510
VAFX-158-42	1-5/8	42	400	$41.50^{+0.20}_{0}$	3.0	280	640

VAF型避震管
VAF Type Vibration Eliminator

专利结构

产品概述 Product Description

• VAF型避震管是设计用于安装在制冷系统和空调的吸气和排气管路中，可降低由压缩机产生并通过系统管路传输的震动。	• VAF Type vibration Eliminator is designed to be assembled in refrigeration or air conditioning system to lower the vibration from compressors.

产品特点 Features

• 波纹管材质为SUS316L，耐腐蚀性能优异。 • 采用三位一体焊将接头、网套、压圈一起氩弧焊，具有安全、强度高等特点。 • 波纹管与接头采用炉中钎焊，焊接质量稳定。 • 安装范围广(可安装于汽车空调系统)。 • 具有良好的吸震和补偿热位移。 • VAF型避震管已通过UL认证。	•SUS316L corrugated pipe supports with high corrosion resistance •Trinity Argon Arc welding of wire sleeve, pipe connector and clamping ring makes the vibration eliminator stronger and more safety. •Furnace brazing between the connector and the corrugated pipe provides steady welding quality. •Wide application range(can be also adopted in automotive A/C) •Perfect vibration resistance and good compensation for the heat displacement. •VAF Type vibration Eliminator has been proved by UL.

技术参数 Technical Parameters

适用制冷剂 Applicable Refrigerants	HCFC/HFC
适用介质温度 Applicable Medium Temp	-40℃~+150℃
最大工作压力 MAX Working Pressure	见选型尺寸表(See Model Selection table)
最大耐压压力 Maximum Proof Pressure	最大工作压力的1.5倍(1.5 time of the M.W.P.)

外形结构 Configuration

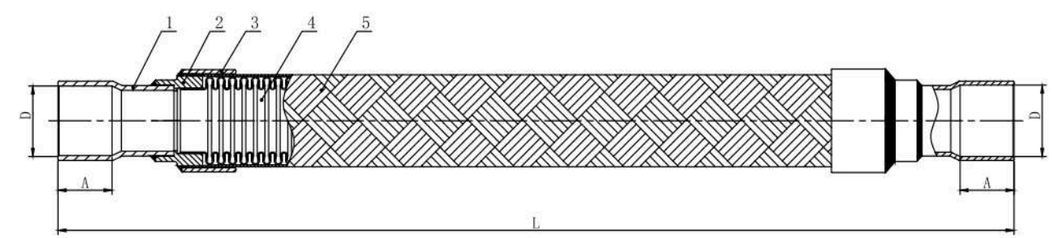

1.紫铜接管 Copper bush；2.波纹管接头 Pipe Connector；3.压圈 Clamping Ring.；4.波纹管 Corrugated Pipe.；5.网套 Wire Sleevering

选型表 Model Selection

型号 Type	规格 Size	外形尺寸 (mm) Outline Dimension (mm)			最大工作压力 (MPa) Max.Working Pressure (MPa)	最小弯曲半径 (mm) Min.Bending Radius (mm)	
		A	L	D		静态 Static(Rj)	动态 Dynamic(Rd)
VAF-038-10	3/8	16	230	$9.70^{+0.15}_{0}$	6.0	80	180
VAF-012-12	1/2	10	250	$12.80^{+0.2}_{0}$		95	215
VAF-058-16	5/8	12	270	$16.10^{+0.2}_{0}$		120	270
VAF-034-19	3/4	14	290	$19.10^{+0.2}_{0}$		145	325
VAF-078-22	7/8	17	300	$22.30^{+0.2}_{0}$		160	360
VAF-100-25	1	20	330	$25.60^{+0.2}_{0}$	5.0	175	400
VAF-118-28	1-1/8	20	330	$28.70^{+0.2}_{0}$		175	400
VAF-114-32	1-1/4	40	380	$32.10^{+0.2}_{0}$		225	510
VAF-138-35	1-3/8	25	380	$35.20^{+0.2}_{0}$		225	510
VAF-158-42	1-5/8	30	430	$41.50^{+0.25}_{0}$	4.5	280	640
VAF-218-54	2-1/8	65	520	$54.20^{+0.25}_{0}$	2.3	350	800
VAF-258-67	2-5/8	75	610	$66.80^{+0.25}_{0}$		390	845
VAF-318-79	3-1/8	80	680	$79.60^{+0.25}_{0}$		480	1000

过滤器系列

DRY FILITER *Series*

100%3A固体滤芯，干燥能力强，不会相互移动，避免了粉末的产生。
40μm过滤精度，可在最小压降下保持高效过滤，耐腐蚀的表面粉末喷涂，可用于各种环境标准螺口及焊口连接，也可按用户需要定制可任意方向安装。

100% 3A filter cartridge with powerful drying capacity, not mutual mobile, avoid the powder production With a filter fineness of 40 μm. Corrosion resistant powder coating finish is applicable to various environ ments. Threaded connection and welded connection is normal design andcustomer design is available. Could be mounted in any desirable direction.

BFK型双向过滤器 BFK Bidirectional Dry Filter

产品概述 Product Description

- BKF型双向干燥过滤器用于制冷空调装置的液体管路上，用来干燥制冷剂（吸收系统的水分）及过滤系统内的固体杂质、以有效而安全地保护制冷空调系统
- BKF型双向干燥过滤器的主要组分是80%分子筛+20%氧化铝和100un滤棉
- BKF型双向干燥过滤器是80%分子筛+20%氧化铝的固体滤芯，可用于HFC和HCFC制冷剂以及合成聚酯油（POE或PAG）系统

- BFK bidirectional dry filter is used on the liquid piping of refrigeration and air conditioning unit to dry refrigerant (absorb water from system) and filter the solid from system in order to protect the refrigeration and air conditioning system for an efficient and safety operation.
- Model BFK bidirectional dry filter is composed of 80% 3A molecular sieve & 20% active aluminium with 100un filter cartridge.
- The filter core of 80% molecular sieve & 20% active aluminium can be used be for HFC and HCFC refrigerants and synthesized polyester oil (POE or PAG) system.

产品特点 Features

- BFK型双向干燥过滤器80%3A+20%氧化铝固体滤芯，干燥能力强，除酸能力强。
- 40μm过滤精度，可在最小压降下保持高效过滤，耐腐蚀的表面粉末喷涂，可用于各种环境标准螺口及焊口连接，也可按用户需要定制可任意方向安装。

- Filter cartridge of 80% 3A molecular sieve and 20% active aluminium filter cartridge presents powerful drying capacity and powerful deacidification capacity.
- With a filter fineness of 40 μm. Corrosion resistant powder coating finish is applicable to various environments. Threaded connection and welded connection is normal design and customer design is available. Could be mounted in any desirable direction.

外形结构 Configuration

螺口 Thread:
1.橡胶塞 rubber plug
2.螺纹封帽 thread cap
3.铁接头 steel connector
4.端盖 end cap
5.双向座冲件 circuit change valve
6.滤网 filter net
7.细滤网 fine filter
8.滤棉 filter pad
9.烧结滤芯 solid filter cartridge
10.筒体 barrel
11.标贴 label

焊口 Soldering:
1.橡胶塞 rubber plug
2.接管 weiding pipe
3.端盖 end cap
4.双向座冲件 circuit change valve
5. 滤网 filter net
6.细滤网 fine filter
7.滤棉 filter pad
8.烧结滤芯 solid filter cartridge
9.筒体 barrel
10.标贴 label

技术参数 Technical Parameters

适用制冷剂 Applicable Refrigerant:	HCFC、HFC
适用介质温度 Applicable Medium Temperature:	-40℃~+120℃
最大工作压力 Maxmum Working Pressure	4.2MPa
最大试验压力 Maximum Test Pressure	6.3MPa

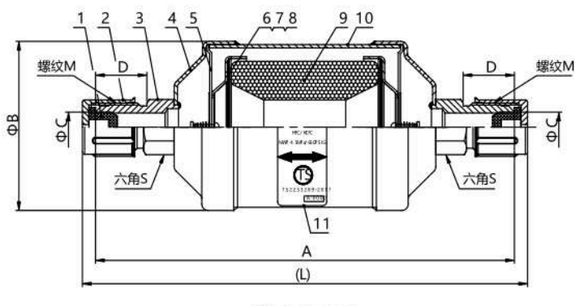

螺口 Thread

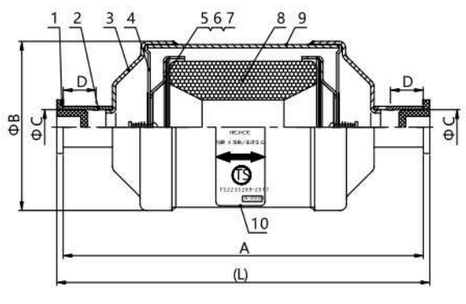

选型 Product Model

螺口 Thread

型号 Model			规格 Size
BFK-083	BFK-163	BFK-303	3/8 SAE
BFK-084	BFK-164	BFK-304	1/2 SAE
BFK-085	BFK-165	BFK-305	5/8 SAE
——	——	BFK-306	3/4 SAE
——	——	——	——
——	——	——	——

选型 Product Model

焊口 Soldering

型号 Model			规格 Size
BFK-083S	BFK-163S	BFK-303S	3/8 ODF
BFK-084S	BFK-164S	BFK-304S	1/2 ODF
BFK-085S	BFK-165S	BFK-305S	5/8 ODF
——	——	BFK-306S	3/4 ODF
——	——	BFK-307S	7/8 ODF
——	——	BFK-309S	1-1/8 ODF

SAE 接口 SAE connection

型号 Model	接口 Connection	A	ΦB	ΦC	D	L	S	螺纹 Thread M	重量 Weight(g)
BFK-083	3/8 SAE	158	Φ66.5	Φ8	17	167	16	5/8-18UNF	582
BFK-084	1/2 SAE	165	Φ66.5	Φ10	19	175	19	3/4-16UNF	624
BFK-085	5/8 SAE	176	Φ66.5	Φ13	23.5	188	22	7/8-14UNF	661
BFK-163	3/8 SAE	170	Φ79	Φ8	17	179	16	5/8-18UNF	799
BFK-164	1/2 SAE	179	Φ79	Φ10	19	189	19	3/4-16UNF	839
BFK-165	5/8 SAE	186	Φ79	Φ13	23.5	198	22	7/8-14UNF	893
BFK-303	3/8 SAE	245	Φ79	Φ8	17	254	16	5/8-18UNF	1303
BFK-304	1/2 SAE	254	Φ79	Φ10	19	264	19	3/4-16UNF	1334
BFK-305	5/8 SAE	261	Φ79	Φ13	23.5	273	22	7/8-14UNF	1294
BFK-306	3/4 SAE	265	Φ79	Φ16	25	277	27	1-1/16-14UNS	1352

ODF 接口 ODF connection

型号 Model	接口 Connection	A	ΦB	ΦC	D	L	重量 Weight(g)
BFK-083S	3/8 ODF	141	Φ66.5	Φ9.7	9	147	542
BFK-084S	1/2 ODF	149	Φ66.5	Φ12.8	11	155	558
BFK-085S	5/8 ODF	149	Φ66.5	Φ16.1	11	155	570
BFK-163S	3/8 ODF	153	Φ79	Φ9.7	9	159	757
BFK-164S	1/2 ODF	161	Φ79	Φ12.8	11	167	773
BFK-165S	5/8 ODF	161	Φ79	Φ16.1	11	167	780
BFK-303S	3/8 ODF	228	Φ79	Φ9.7	9	234	1200
BFK-304S	1/2 ODF	236	Φ79	Φ12.8	11	242	1215
BFK-305S	5/8 ODF	236	Φ79	Φ16.1	11	242	1227
BFK-306S	3/4 ODF	241	Φ79	Φ19.1	12	247	1232
BFK-307S	7/8 ODF	247	Φ79	Φ22.3	15	253	1242
BFK-309S	1-1/8 ODF	256	Φ79	Φ28.7	16	262	1280

DFS型干燥过滤器 Model DFS Dry Filter

产品概述 Product Description

- DFS型干燥过滤器用于制冷空调装置的液体管路上，用来干燥制冷剂（吸收系统的水份）及过滤系统日的固体杂质、以有效而安全地保护制冷空调系统。
- DFS型干燥过滤器的主要组分是100%3A分子筛和100un滤棉。
- DFS型干燥过滤器的分子筛是100%3A固体滤芯，可用于HFC和HCFC制冷剂以及合成聚脂油（POE或PAG）系统。

- Model DFS dry filter is used on the liquid piping of refrigeration and air conditioning unit to dry refrigerant (absorb water from system) and filter the solid from system in order to protect the refrigeration and air conditioning system for an efficient and safety operation.
- Model DFS dry filter is composed of 100% 3A molecular sieve and 100un filter cartridge.
- Model DFS dry filter’s molecular sieve is 100% 3A solid filter cartridge. This solid filter is used for HFC and HCFC refrigerants and synthesized polyester oil (POE or PAG) system.

产品特点 Features

- 100%3A固体滤芯，干燥能力强，不会相互移动，避免了粉末的产生。
- 40μm过滤精度，可在最小压降下保持高效过滤，耐腐蚀的表面粉末喷涂，可用于各种环境标准螺口及焊口连接，也可按用户需要定制可任意方向安装。

- 100% 3A filter cartridge with powerful drying capacity, not mutual mobile, avoid the powder production.
- With a filter fineness of 40 μm.
  Corrosion resistant powder coating finish is applicable to various environ ments. Threaded connection and welded connection is normal design and customer design is available. Could be mounted in any desirable direction.

外形结构 Configuration

螺口 Thread:
1.橡胶塞 rubber plug
2.螺纹封帽 thread cap
3.铁接头 steel connector
4.铁碗 steel cup
5.挡片 barrier
6.烧结滤芯 solid filter cartridge
7.滤棉 filter pad
8.滤网 filter net
9.标贴 label

焊口 Soldering:
1.橡胶塞帽 rubber plug hat
2.接管 weiding pipe
3.铁碗 steel cup
4.挡片 barrier
5.烧结滤芯 solid filter cartridge
6.滤棉 filter pad
7.滤网 filter net
8.标贴 label

技术参数 Technical Parameters

适用制冷剂 Applicable Refrigerant:	HCFC、HFC
适用介质温度 Applicable Medium Temperature:	-40℃~+120℃
最大工作压力 Maxmum Working Pressure	4.2MPa
最大试验压力 Maximum Test Pressure	6.3MPa

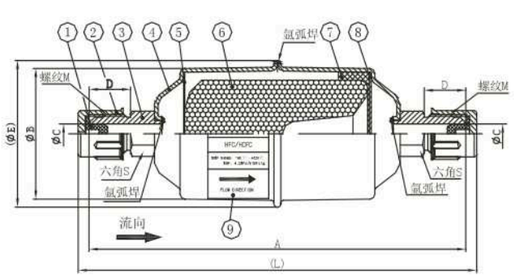

螺口 Flare

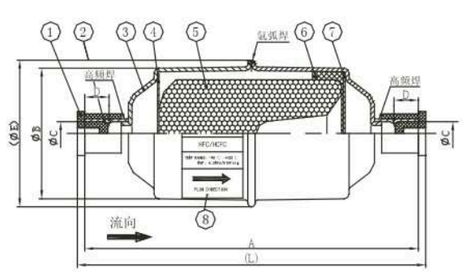

焊口 Welding

选型 Product Model

螺口 Flare

型号 Model				规格 Size
DFS-052	——	——	——	1/4 SAE
DFS-053	DFS-083	DFS-163	——	3/8 SAE
——	DFS-084	DFS-164	DFS-304	1/2 SAE
——	DFS-085	DFS-165	DFS-305	5/8 SAE
——	——	——	DFS-306	3/4 SAE
——	——	——	——	——
——	——	——	——	——

选型 Product Model

焊口 Welding

型号 Model				规格 Size
DFS-052S	-----	-----	-----	1/4ODF
DFS-053S	DFS-083S	DFS-163S	-----	3/8ODF
-----	DFS-084S	DFS-164S	DFS-304S	1/2ODF
-----	DFS-085S	DFS-165S	DFS-305S	5/8ODF
-----	-----	-----	DFS-306S	3/4ODF
-----	-----	-----	DFS-307S	7/8ODF
-----	-----	-----	DFS-309S	1-1/8ODF

SAE 接口 Flare connection

型号 Model	接口Connection	A	ΦB	ΦC	D	ΦE	L	S	螺纹 Thread M	重量 Weight(g)
DFS-032	1/4 SAE	110	Φ43	Φ4.8	14	Φ46	114	14	7/16-20UNF	183
DFS-033	3/8 SAE	119	Φ43	Φ8	17	Φ46	128	16	5/8-18UNF	211
DFS-052	1/4 SAE	118	Φ54	Φ4.8	14	Φ57	124	14	7/16-20UNF	261
DFS-053	3/8 SAE	127	Φ54	Φ8	17	Φ57	136	16	5/8-18UNF	289
DFS-083	3/8 SAE	152	Φ54	Φ8	17	Φ57	161	16	5/8-18UNF	372
DFS-084	1/2 SAE	159	Φ54	Φ10	19	Φ57	169	19	3/4-16UNF	403
DFS-085	5/8 SAE	170	Φ54	Φ13	23.5	Φ57	182	22	7/8-14UNF	440
DFS-163	3/8 SAE	159	Φ75	Φ8	17	Φ79	168	16	5/8-18UNF	615
DFS-164	1/2 SAE	168	Φ75	Φ10	19	Φ79	178	19	3/4-16UNF	655
DFS-165	5/8 SAE	177	Φ75	Φ13	23.5	Φ79	189	22	7/8-14UNF	695
DFS-304	1/2 SAE	256	Φ79	Φ10	19	Φ79	266	19	3/4-16UNF	1325
DFS-305	5/8 SAE	267	Φ79	Φ13	23.5	Φ79	279	22	7/8-14UNF	1365
DFS-306	3/4 SAE	268	Φ79	Φ16	25	Φ79	280	27	1-1/16-UNS	1423

ODF 接口 Welding connection

型号 Model	接口 Connection	A	ΦB	ΦC	D	ΦE	L	重量 Weight(g)
DFS-032S	1/4 ODF	99	Φ43	Φ6.5	8	Φ46	103	159
DFS-033S	3/8 ODF	101	Φ43	Φ9.7	9	Φ46	107	166
DFS-052S	1/4 ODF	107	Φ54	Φ6.5	8	Φ57	111	235
DFS-053S	3/8 ODF	109	Φ54	Φ9.7	9	Φ57	115	242
DFS-083S	3/8 ODF	134	Φ54	Φ9.7	9	Φ57	140	320
DFS-084S	1/2 ODF	142	Φ54	Φ12.8	11	Φ57	148	335
DFS-085S	5/8 ODF	142	Φ54	Φ16.1	11	Φ57	148	348
DFS-163S	3/8 ODF	142	Φ75	Φ9.7	9	Φ79	148	527
DFS-164S	1/2 ODF	150	Φ75	Φ12.8	11	Φ79	156	542
DFS-165S	5/8 ODF	150	Φ75	Φ16.1	11	Φ79	156	547
DFS-304S	1/2 ODF	239	Φ79	Φ12.8	11	Φ79	245	1263
DFS-305S	5/8 ODF	239	Φ79	Φ16.1	11	Φ79	245	1268
DFS-306S	3/4 ODF	244	Φ79	Φ19.1	12	Φ79	250	1286
DFS-307S	7/8 ODF	250	Φ79	Φ22.3	15	Φ79	256	1302

DFS型干燥过滤筒
Model DFS Replaceable Dry Filter Cartridge

产品概述 Product Description

- DFS型干燥过滤筒安装在系统的液、汽管路中，可有效去除残留的污染物，从而使压缩机得到更好的保护，延长其使用寿命。
- DFS型干燥过滤筒是可更换滤芯的，最大的特点是用于吸附压缩机马达烧毁后进入系统中大量的水分

- Model DFS dry filter cartridge is installed on the liquid and vapor piping, which could effectively remove any residual contaminant to protect compressor for a longer service life.
- The filter element of Model DFS dry filter cartridge is replaceable and it is capable to absorb large amount of water in the system in case the compressor motor burns up.

产品特点 Features

- 可拆式结构、便于安装及维修；
- 100目出口滤网；
- 全流通设计，最大限度的减少压降；
- 钢制壳体，铜接管焊接口，高频焊接采用翻边结构，增加焊接可靠性；
- 改性聚四氟乙烯新型材料，确保密封性；
- 外涂层采用环氧树脂静电喷漆。

- Removable structure for convenient installation and maintenance;
- 100 mesh outlet filter screen;
- Full pass through design to minimize pressure drop;
- Steel casing, copper pipe welded connection, high frequency welding flanging structure to improve welding reliability;
- Modified Teflon new material to ensure perfect sealing;
- Outer surface applies epoxy resin coating protection.

技术参数 Technical Parameters

适用制冷剂 Suitable Refrigerants	HCFC、HFC、CFC
适用介质温度 Suitable Medium Temperature	-35℃~+70℃
最大工作压力 Maximum Working Pressure	4.2MPa
最大试验压力 Maximum Test Pressure	6.3MPa

选型表 Model Selection

型号 Type	进出口尺寸 Connections To solder ID (inch)	芯体数量 Number of cores	过滤面积(㎡) Filtering surface(㎡)	尺寸 Dimensions (mm)		
				A	B	C
DFS-485S	5/8ODF	1	420	234	153	85
DFS-486S	3/4ODF			234	153	85
DFS-487S	7/8ODF			234	153	85
DFS-489S	1-1/8ODF			236	155	87
DFS-4811S	1-3/8ODF			240	159	91
DFS-4813S	1-5/8ODF			242	161	93
DFS-4817S	2-1/8ODF			246	160	99
DFS-4821S	2-5/8ODF			244	158	106
DFS-967S	7/8ODF	2	840	376	295	85
DFS-969S	1-1/8ODF			378	297	87
DFS-9611S	1-3/8ODF			382	301	91
DFS-9613S	1-5/8ODF			384	303	93
DFS-9617S	2-1/8ODF			388	302	99
DFS-9621S	2-5/8ODF			386	300	106
DFS-1449S	1-1/8ODF	3	1260	520	439	87
DFS-14411S	1-3/8ODF			524	443	91
DFS-14413S	1-5/8ODF			526	445	93
DFS-14417S	2-1/8ODF			530	444	99
DFS-14421S	2-5/8ODF			528	442	106
DFS-19211S	1-3/8ODF	4	1680	668	587	91
DFS-19213S	1-5/8ODF			670	589	93
DFS-19217S	2-1/8ODF			674	588	99
DFS-19221S	2-5/8ODF			670	584	106

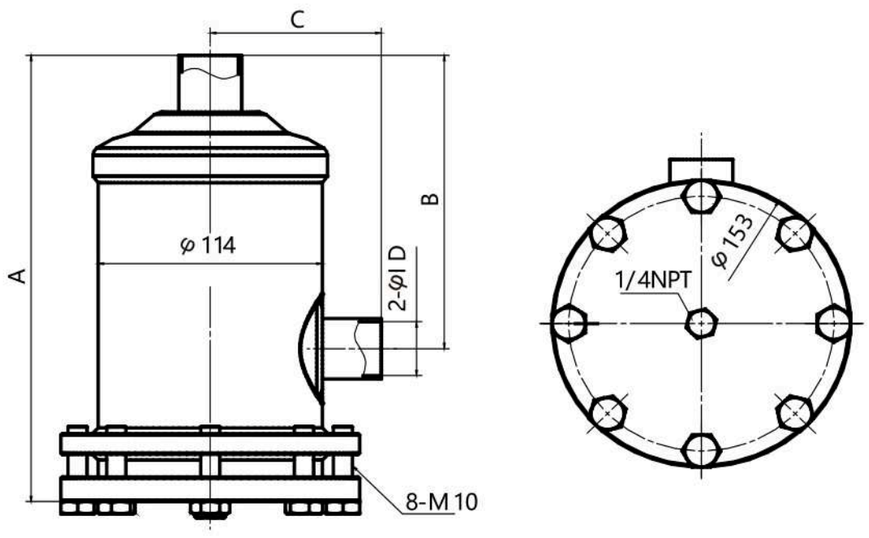

技术参数表 Technical Parameters

型号 Type	ARI标准状态下的额度值 Rating under Ari Standard Condition															选择推荐值(Kw) Recommended value				
	水溶量——点滴数Water volume-number of drop										制冷剂流过能量 refrigerant flow through energy					制冷 refrigeration			空调 air conditioning	
	制冷剂 Refrigerant R12 15PPM		制冷剂 Refrigerant R134a 80PPM		制冷剂 Refrigerant R22 60PPM		制冷剂 Refrigerant R404a/507 50PPM		制冷剂 Refrigerant R502 30PPM		压差 pressure differential=0.014mpal					商用制冷及低温设备 Commercial frigeration and cryo genic equipment			现场更换现场装配系统 Replacementon site. Site asembly system.	
	25℃	50℃	25℃	50℃	25℃	50℃	25℃	50℃	25℃	50℃	R12	R134a	R22	R404a/507	R502	R12/R134a	R22	R404a/502507	R12/R134a	R22
DFS-485S	25.6	27.2	22.0	18.4	17.4	14.4	20.4	15.5	18.2	14.1	53.5	64.7	70.3	52.8	45	26.4	35.2	26.4	26.4	35.2
DFS-487S	25.6	27.2	22.0	18.4	17.4	14.4	20.4	15.5	18.2	14.1	89.7	209	116	87.9	75.3	42.2	52.8	35.2	42.2	52.8
DFS-489S	25.6	27.2	22.0	18.4	17.4	14.4	20.4	15.5	18.2	14.1	162	195	211	158	136	42.2	52.8	35.2	52.8	70.3
DFS-4811S	25.6	27.2	22.0	18.4	17.4	14.4	20.4	15.5	18.2	14.1	183	234	250	230	197	42.2	52.8	35.2	52.8	70.3
DFS-4813S	25.6	27.2	22.0	18.4	17.4	14.4	20.4	15.5	18.2	14.1	192	274	299	197	180	47.8	48.2	42.2	56.3	74.6
DFS-4817S	25.6	27.2	22.0	18.4	17.4	14.4	20.4	15.5	18.2	14.1	205	310	338	236	217	49.3	64.9	74.1	60.2	78.5
DFS-4821S	25.6	27.2	22.0	18.4	17.4	14.4	20.4	15.5	18.2	14.1	237	336	347	269	239	52.7	67.3	49.7	63.3	80.2
DFS-967S	51.2	44.3	44.0	36.8	34.7	28.8	40.8	30.9	36.3	28.2	147	177	190	144	123	70.3	87.9	52.8	70.3	87.9
DFS-969S	51.2	44.3	44.0	36.8	34.7	28.8	40.8	30.9	36.3	28.2	183	220	236	176	153	87.9	128	87.9	87.9	123
DFS-9611S	51.2	44.3	44.0	36.8	34.7	28.8	40.8	30.9	36.3	28.2	211	255	276	195	187	111.5	152	111.1	111.1	155
DFS-9613S	51.2	44.3	44.0	36.8	34.7	28.8	40.8	30.9	36.3	28.2	263	297	311	232	213	123.1	194	134.5	134.5	190
DFS-9617S	51.2	44.3	44.0	36.8	34.7	28.8	40.8	30.9	36.3	28.2	293	332	329	367	303	135.1	203	157	156	208
DFS-9621S	51.2	44.3	44.0	36.8	34.7	28.8	40.8	30.9	36.3	28.2	326	352	347	393	314	157	220	191	173	232
DFS-1449S	76.8	66.5	66.0	55.2	52.1	43.2	61.2	46.4	54.5	42.3	220	265	285	215	184	106	141	106	106	141
DFS-14411S	76.8	66.5	66.0	55.2	52.1	43.2	61.2	46.4	54.5	42.3	254	305	327	246	212	141	176	123	141	176
DFS-14413S	76.8	66.5	66.0	55.2	52.1	43.2	61.2	46.4	54.5	42.3	282	374	358	270	245	183	205	134	173	206
DFS-14417S	76.8	66.5	66.0	55.2	52.1	43.2	61.2	46.4	54.5	42.3	310	431	392	301	279	224	236	156	205	247
DFS-14421S	76.8	66.5	66.0	55.2	52.1	43.2	61.2	46.4	54.5	42.3	441	469	432	486	416	243	257	182	216	264
DFS-19211S	102	88.6	88.0	73.6	69.4	57.6	81.6	61.8	72.6	56.4	322	387	415	313	269	176	246	176	176	246
DFS-19213S	102	88.6	88.0	73.6	69.4	57.6	81.6	61.8	72.6	56.4	373	447	478	362	312	211	281	193	211	287
DFS-19217S	102	88.6	88.0	73.6	69.4	57.6	81.6	61.8	72.6	56.4	390	471	503	380	327	229	229	211	229	229
DFS-19221S	102	88.6	88.0	73.6	69.4	57.6	81.6	61.8	72.6	56.4	423	495	528	498	342	243	243	232	241	325

I knew that if I failed I wouldn’t regret that, but I knew the one thing I might regret is not trying.

— Jeff Bezos, Entrepreneur

我知道我如果失败了, 我不会后悔, 但我知道我可能会后悔的是, 没有去尝试。

— 杰佛瑞 · 贝佐斯 (企业家)

压力传输配件系列

FITTING *Series*

高端压力表，功能强大，附件配套齐全，使用便捷。高品质密封材料，使用多种冷媒。

High class pressure gauge, complete accessories arrange, quality sealing material, availabe for more refrigerants.

充油（真空）压力表
Oil-filled(vacuum)Pressure Gauge

242#（Y63）
(-5℃ ~+120℃)

128#（ZY63）
(-40℃~ +120℃)

191#（ZY63）
(-40℃~ +120℃)

产品概述 Product Description

• 充油压力表是内部充油的制冷专用的抗振压力表。	• The pressure gauge is a vibration-proof pressure gauge with oil filled inside for refrigeration use only.
• 充油压力表用于冷冻、冷藏和空气调节装置的机组上。	• The oil-filled pressure gauge is used on freezer, cold store and air-conditioning unit.
• 充油压力表由多种制冷剂共组一表，方便使用。	• The oil-filled pressure gauge is convenient in application as it features one gauge for multiple refrigerants.
• 充油压力表使用全不锈钢表壳、超宽铍青铜弹簧管。	• The oil-filled pressure gauge has full stainless steel casing and wider beryllium bonze spring tube.
• 充油压力表为带法兰安装边的轴向压力表。	• The oil-filled pressure gauge is an axial pressure gauge with edges for flange joint.

产品特点 Features

• 内部充油可抗机组的高频振动	• The inside filled oil functions damping to the high frequency vibration of machinery.
• 带阻尼油杯可防指针快速跳动	• The damping oil cup prevents gauge pointer from quick jumping.
• 带法兰安装边方便安装	• The flanged edge is for convenient mounting.
• 设有超压限位装置	• Over-pressure limit stop is equipped.
• 经强化超压确保零位误差	• Zero error is ensured with strengthening overpressure measures.
• 合理的油封设计无漏油隐患	• Rational oil seal design and no oil leakage worry.
• 设有压力温度对照	• Pressure versus Temperature readings for easy use.
• 具有超长的使用寿命	• Extra long service life.

技术参数 Technical Parameters

适用制冷剂 Applicable Refrigerant	HCFC and HFC
适用介质温度 Applicable Medium Temperature	-5℃~+120℃（-40℃~+120℃）
接口尺寸 Connection Size	1/4SAE
结构型式 Structure	轴向同心嵌装式 Axial concentrically-embedded
外壳公称直径 Casing Nominal Diameter	2.5 in(Φ63.5)
精度等级 Accuracy Class	1.6级

外形尺寸 Overall Dimension

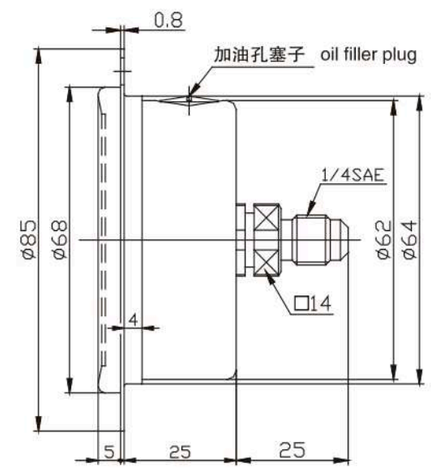

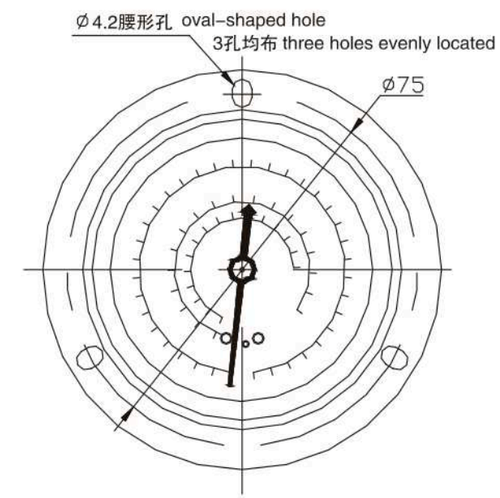

型号 model	充油（真空）压力表 Oil-filled（vacuum）pressure Gauge		
技术参数 Technical Parameters	编号 Code Number：242#	编号 Code Number：128#	编号 Code Number：191#
	接口 Connector： 1/4SAE (ZY63)	接口 Connector： 1/4SAE (ZY63)	接口 Connector：1/4SAE (ZY63)
	适用制冷剂 Application：R22 R134a R404A R407C	适用制冷剂 Application：R410A	适用制冷剂 Application：R22 R134a R404A R407C
特点 Features	• 进口高精度压力表机芯 • 特殊的超压限位装置 • 自动调零装置	• Imported high precision gauge internal • Special overpressure limiting device • Micro-adjustable zero	

充注阀 Charging valve

产品概述 Product Description

• 充注阀是一种带气门芯的单向检修用阀。 • 充注阀用于冷冻、冷藏和空气调节装置的各个部位。	• The charging valve is an one-way service valve with valve inside. • The charging valve is used on the freezer, cold store and air-conditioning unit.

产品特点 Features

• 采用优质供应商气门芯，性能可靠 • 双重密封确保无泄漏 • 可提供各种长度和硬度的铜接管 • 阀帽滚花设计，装卸方便	• Equipped with imported valve inside of reliable performance. • Double sealing ensure leak-tight. • Copper tube of various lengths and hardness are available. • Valve bonnet is knurled for easy handling.

技术参数 Technical Parameters

适用制冷剂 Applicable Refrigerant	HCFC and HFC
适用介质温度 Applicable Medium Temperature	-25℃~+120℃
最大工作压力 Max. Operating Pressure	3.0MPa
最大耐压压力 Max. Allowable Pressure	4.5MPa

外形结构 Configuration

A 型

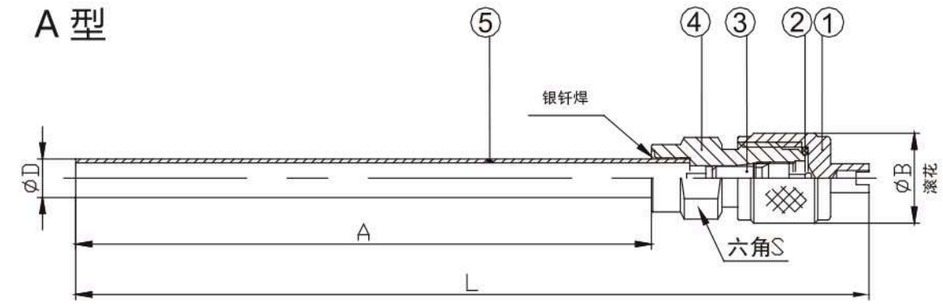

B 型

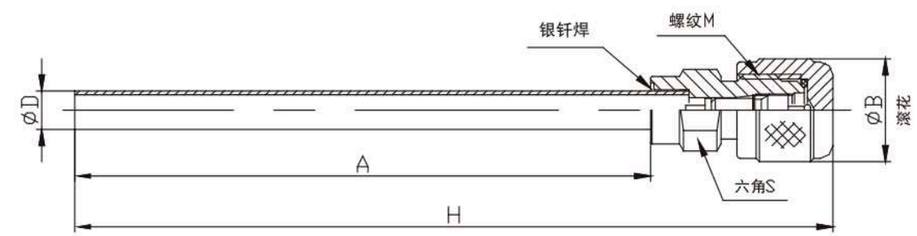

1.阀帽 valve bonnet
2.O形圈 O-ring
3.气门芯 valve core
4.阀体 valve body
5.铜接管 copper tube

选型表 Model Selection

型号 Type	接口 Connection	规格 Size	外形尺寸 Overall Dimension					六角 Hexagonal S	螺纹 Thread M	重量(g) Weight(g)
			A	B	ΦD	H	L			
Type A	1/4SAE	1/8	60	14	3.17	--	94	11	7/16-20UNF	22
	1/4SAE	3/16	60	14	4.76	--	94	11	7/16-20UNF	23
	1/4SAE	1/4	90	14	6.35	--	124	11	7/16-20UNF	28
Type B	1/4SAE	1/4	90	14	6.35	118	---	12	7/16-20UNF	30
	1/2SAE	1/4	90	16	6.35	118	---	14	1/2-20UNF	39
	1/2SAE	1/4	90	16	6.35	118	---	14	1/2-16UNF	40

注：A、H、L长度也可按客户要求定制

HMG型高压毛细软管 接头类
Type HMG High Pressure Hose and Fittings

产品概述 Product Description

- HMG型高压软管是柔性连接件，主要用于冷冻、冷藏及空气调节装置的压缩机吸排气管。
- Type HMG hose is a flexible connection piece and it is mainly used as compressor suction and/or exhaust tube in the refrigeration, cold storage and air conditioning facilities.

选型表 Model Selection

A

B

C

D

E

F

G

H

I

J

K

L

M

N

O

P

Q

R

S

T

U

产品特点 Features

- 采用优质尼龙、聚酯材料制作，产品耐高压、耐高温、耐老化性能强，内壁光滑，介质流阻小。
  代替铜管焊接不牢固，容易振动失漏，无法维修，噪音大等缺点，而且节省系统连接时间，长度任意取舍，技术可靠性大大提高。
- Made of high quality nylon and polyester. High pressure resistance, high temperature resistance and high ageing resistance. Small flow resistance due to its smooth internal wall.
  Eliminate the shortcomings of copper tube such as soldering failure, leakage, noise and difficult service. Selectable length at ease and short the connection operation time, improve the technical reliability obviously.

技术参数 Technical Parameters

适用制冷剂 Applicable Refrigerant	HCFC and HFC
适用介质温度 Applicable Medium Temperature	-40℃~+100℃

选型表 Model Selection

编号 Code	型号规格 Type	名称 Description	内径 ID	外径 OD	最大工作压力 MPa Max.Working Pressure MPa	爆破试验压力 MPa Blasting Test Pressure MPa
A	HS-HMG-2	高压软管 high pressure hose Φ2	Φ2.5	Φ5.6	5.5	30
B	HS-HMG-4	高压软管 high pressure hose Φ4	Φ3.4	Φ7.8	5.5	30
C	HS-HMG-8	高压软管 high pressure hose Φ8	Φ6.2	Φ10.5	4.2	20
D	Φ2.6×1/4"	弯芯90° 带纳子 90° bend core with 1/4'' nut1/4''	Φ1.0	Φ2.6		
E	Φ2.6×Dg4	弯芯90° 带纳子Dg4 90° bend core with Dg4 nut	Φ1.0	Φ2.6		
F	φ2.6	直芯 straight core	Φ1.0	Φ2.6		
G	1/4"	纳子1/4'' 1/4'' nut				
H	Dg4	纳子 Dg4 nut				
I	φ2.6	三通（T型） Tee	Φ1.0	Φ2.6		
J	φ5.9×12.3	铝套 aluminum sleeve	Φ5.9	Φ8		
K	φ3.5×1/4"	弯芯90° 带纳子 1/4'' 90° bend core with 1/4'' nut	Φ1.7	Φ3.5		
L	φ3.5×Dg4	弯芯90° 带纳子Dg4 90° bend core with Dg4 nut	Φ1.7	Φ3.5		
M	φ3.5	直芯 straight core	Φ1.7	Φ3.5		
N	φ3.5	三通（T型）Tee	Φ1.7	Φ3.5		
O	φ8×18	铝皮套 Aluminium sleeve	Φ8	Φ11		
P	φ6.3×3/8"	弯芯90° 带纳子 3/8'' 90° bend core with 3/8'' nut	Φ3.2	Φ6.3		
Q	Φ6.3	直芯 straight core	Φ3.2	Φ6.3		
R	3/8"	纳子 3/8" 3/8" nut				
S	Φ10.8×18	铝皮套 Aluminium sleeve	Φ10.8	Φ13.1		
T	1/4"	铜封环 copper seal ring				
U	3/8"	铜封环 copper seal ring				

蒸发压力控制
Evaporation pressure control

工程案例：多温库和变温库(+10℃～0℃，-5℃～-15℃，-18℃～-25℃)

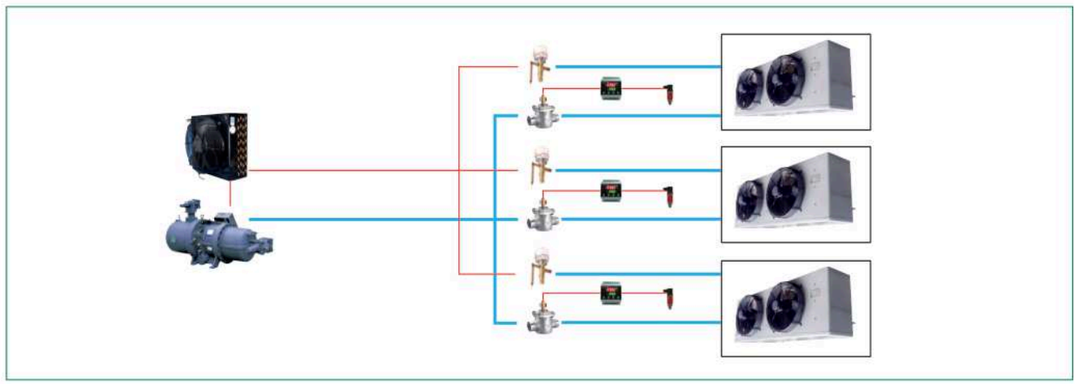

产品特点 Features

- 实现单系统多温库功能
- 库温稳定可调节

· For multi-temperature cold rooms within one single system
· For stable and adjustable temperature in cold room

恒定温度控制（推荐）：油温控制精度±1℃
Constant temperature control: Oil temperature±1℃

满液系统供液控制
Liquid supplement in barrel pump system

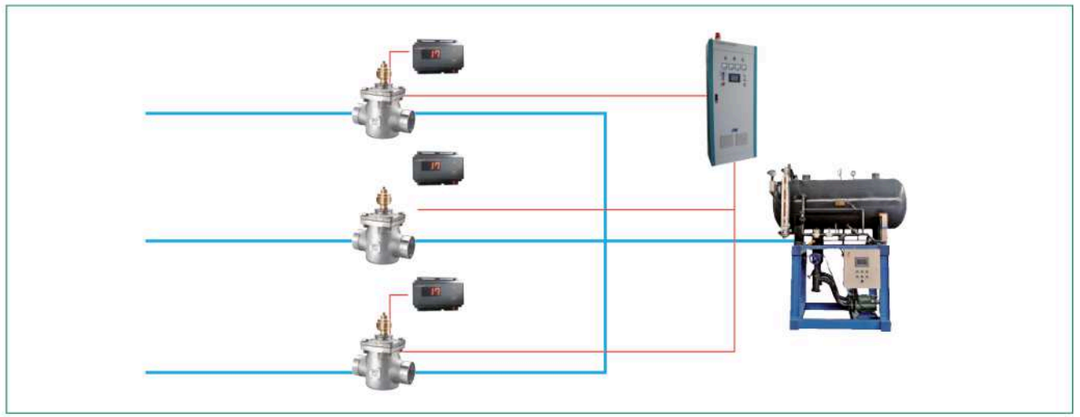

产品特点 Features

- 零压差开启
- 避免工业管道液锤现象
- 集中供液时开度大小，可以任意设置分液均匀
- 两步式开启功能

· Work at ΔP=0
· Avoid liquid hammer
· Average the flow by adjust the open degree
· Step open

多路分组热氟融霜控制
3-way regulating valve applied for defrosting control

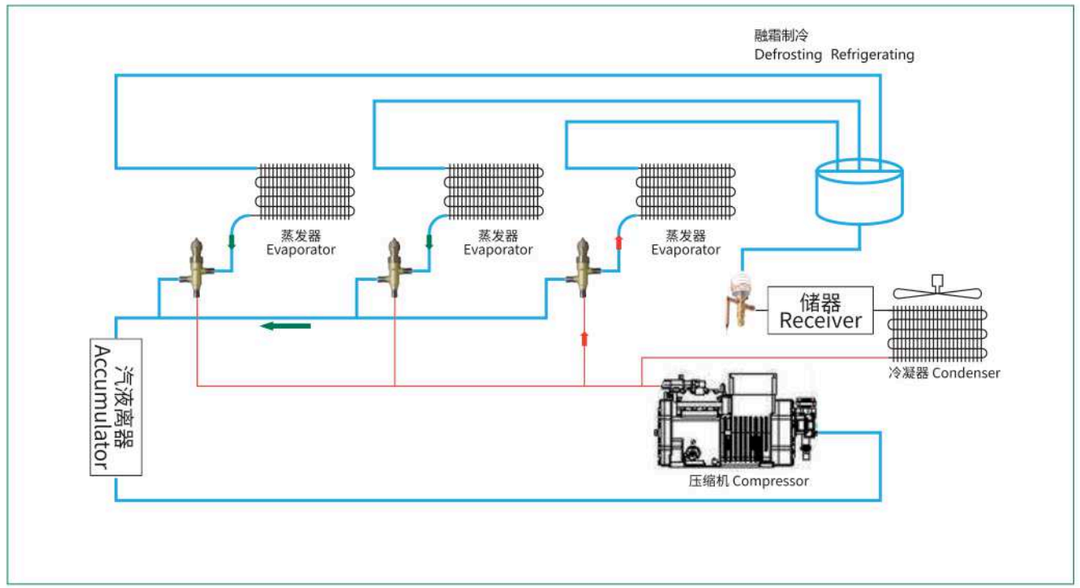

三通电动调节阀在热氟化霜中的应用
3-way regulating valve applied for defrosting control

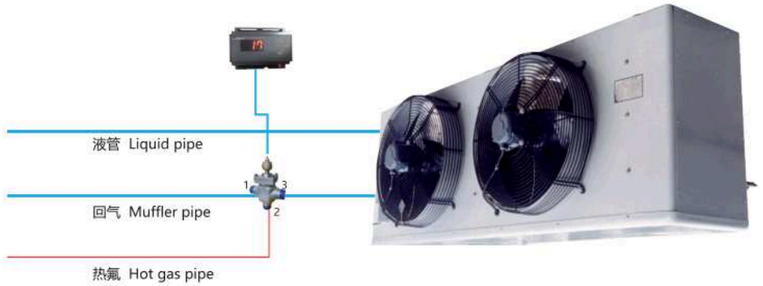

产品特点 Features

- 二步开启，避免液锤
- 三通，减少阀门，代替电磁阀和化霜阀
- 节能，可靠

· Two step open, avoid liquid hammer
· 3-way, reduce valves by replacing solenoid valve and defrosting valve
· Energy efficient and reliable

电动三通调节阀（热泵烘干控制）
3 way motorized regulating valve applied in heat pump dryer

产品特点 Features

- 干燥效率高
- 节能

· More efficient by shorten drying time
· Energy efficiency
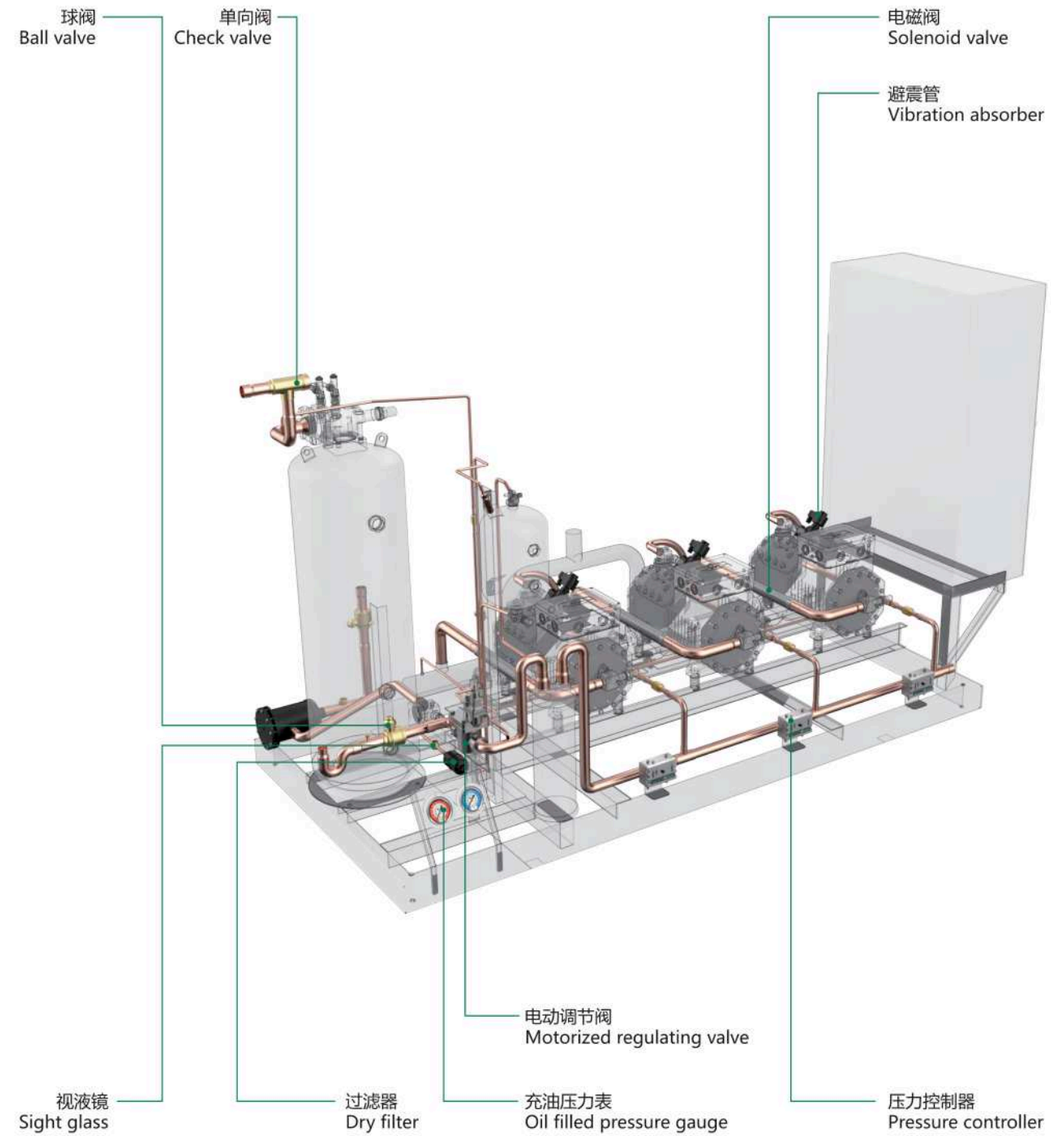
制冷系统中的应用
Application in refrigeration system